SUMMERLAND WASTEWATER TREATMENT FACILITY
GRIT REMOVAL PROCESS UPGRADE

STANTEC PROJECT No. 112180002

DISTRICT OF SUMMERLAND
BRITISH COLUMBIA, CANADA

ISSUED FOR 100% REVIEW
FEB. 26, 2013

LOCATION PLAN
NOT TO SCALE

GENERAL	
G–001	COVER PAGE & DRAWING INDEX
G–002	SITE PLAN
CIVIL	
C–101	SITE GRADING
C–102	YARD PIPING
STRUCTURAL	
S–001	GENERAL NOTES
S–101	FOUNDATION PLAN
S–102	MAIN FLOOR PLAN
S–103	MAIN FLOOR PLAN AT MEZZANINE
S–104	ROOF PLAN
S–105	ELEVATIONS
S–300	SECTIONS
S–500	DETAILS
S–501	DETAILS
S–502	STAIR SECTION
S–503	DETAILS
S–504	DETAILS
S–505	DETAILS
PROCESS	
P–001	PROCESS IDENTIFICATION, ABBREVIATION & SYMBOLS
P–002	INSTRUMENTATION LEGEND & SYMBOLS
P–101	PROCESS & INSTRUMENTATION DIAGRAM – SCREEN & GRIT CHAMBER
P–102	PROCESS & INSTRUMENTATION DIAGRAM – GRIT PUMP, CYCLONE & DEWATERING

PROCESS MECHANICAL	
M–001	STANDARD DETAILS – SHEET 1
M–002	STANDARD DETAILS – SHEET 2
M–101	PLAN
M–102	SECTIONS AND DETAILS
M–103	SECTIONS AND DETAILS
UTILITY MECHANICAL	
H–001	MECHANICAL SITE PLAN
H–100	MECHANICAL MAIN LEVEL PLAN
ELECTRICAL	
E–100	SINGLE LINE DIAGRAM
E–101	MDC / MCC MOTOR SCHEDULE
E–102	MCC ELEVATION
E–103	GRIT ROOM ELECTRICAL PLAN
E–104	CONTROL SCHEMATICS
E–105	GRIT CHAMBER CONTROL PANEL LCP–1065
INSTRUMENTATION	
I–100	DELTA–V ARCHITECTURE
I–101	DELTA–V ARCHITECTURE

DRAWING INDEX

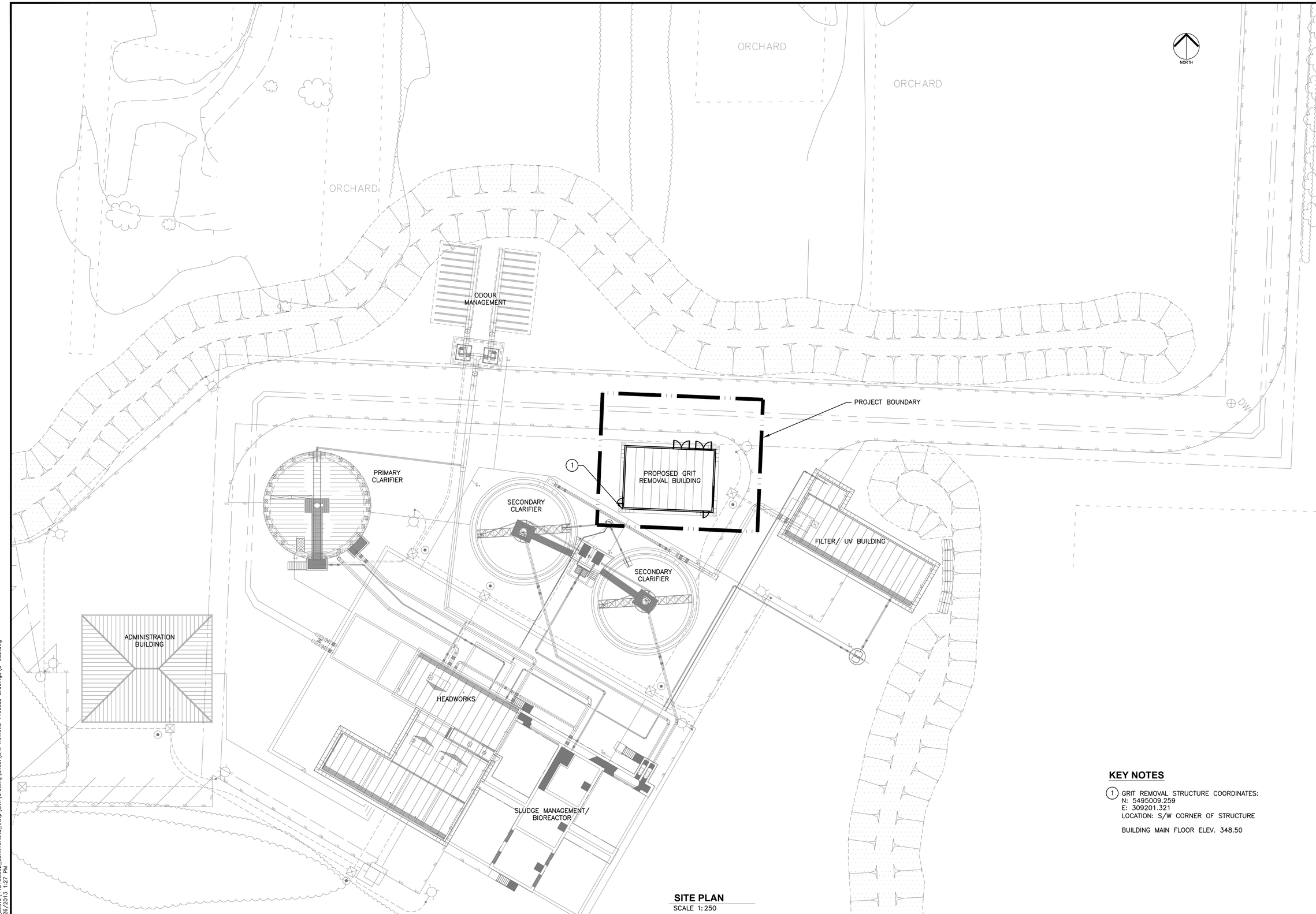

KEY NOTES

1. GRIT REMOVAL STRUCTURE COORDINATES:
   N: 5495009.259
   E: 309201.321
   LOCATION: S/W CORNER OF STRUCTURE

   BUILDING MAIN FLOOR ELEV. 348.50

SITE PLAN
SCALE 1:250

NO	REVISIONS	DRN	CHK	DATE
1	ISSUED FOR 100% REVIEW	CLS	JTK	2013.02.26
2	ISSUED FOR 90% REVIEW	CLS	JTK	2013.01.30
	ISSUED FOR 60% REVIEW	CLS	MY	2012.12.20

DRN	CLS	2012.07.27
DES	MY	2012.01.24
CHK	MY	
APP	MY	

PREPARED BY

Stantec Consulting Ltd.
Suite 400
1620 Dickson Avenue
Kelowna, BC V1Y 7T2
Phone: (250) 980-3225
Fax: (250) 860-3367
www.stantec.com

PREPARED FOR

DISTRICT OF SUMMERLAND

DISTRICT OF SUMMERLAND
WASTEWATER TREATMENT FACILITY UPGRADE

GRIT REMOVAL PROCESS UPGRADE
SITE PLAN

DATE	2012.01.24
PROJECT NO	112180002
FILENAME	G-002.DWG
SHEET No.	
DRAWING NO	**G-002**

U:\active\112180002_summerland_wwtp\civil\drawing\sheet\Grit Removal Process Drawings\G-002.dwg
2/26/2013 1:27 PM

ORIGINAL SHEET - Oce D (22" x 34")

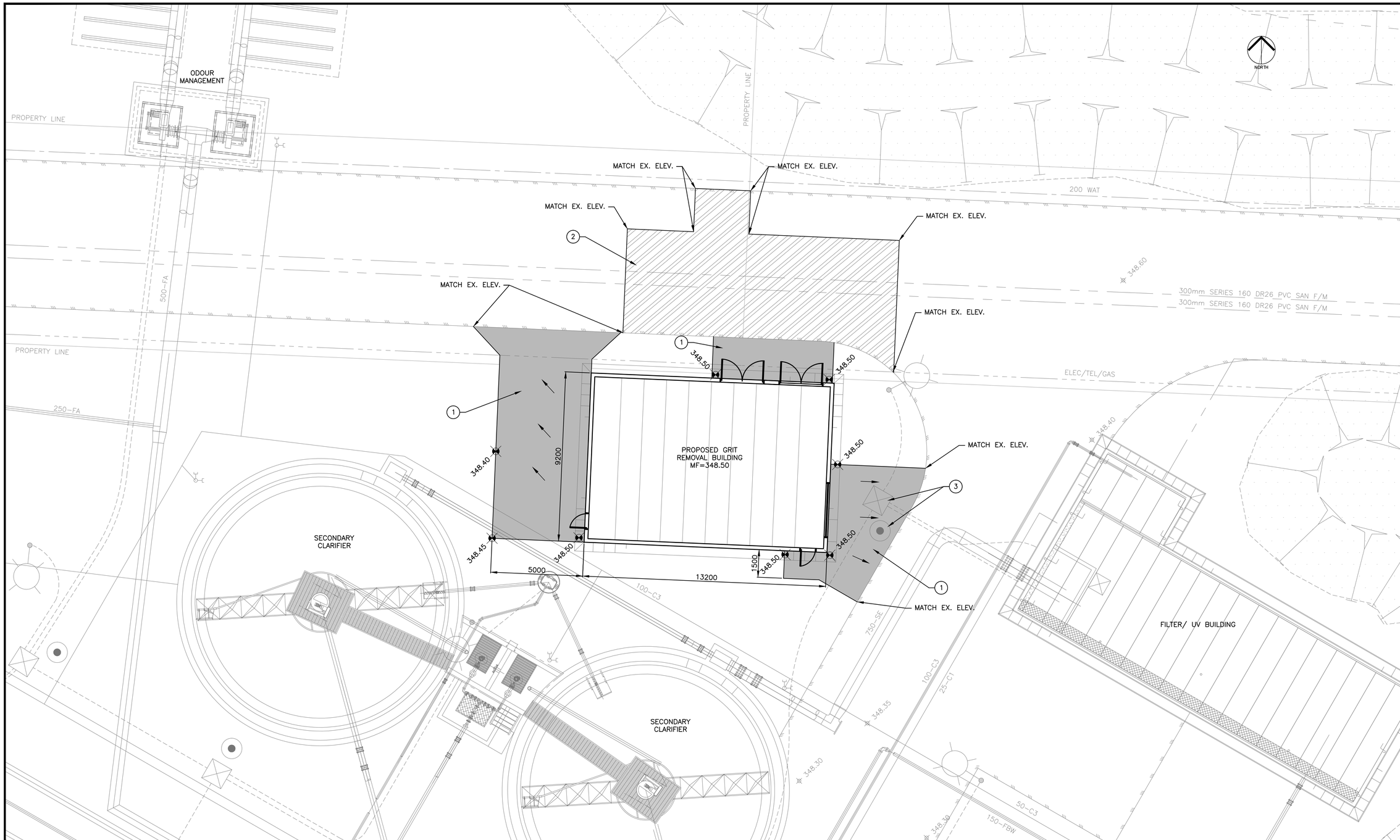

SITE GRADING PLAN

SCALE 1:100

LEGEND:

15	KEY NOTE
	NEW PAVEMENT
	RESTORED PAVEMENT
348.35	PROPOSED SPOT ELEVATION
	GRADE ARROW
348.35	EXISTING SPOT ELEVATION

KEY NOTES

1. NEW ASPHALT AREA STRUCTURE:
   50mm – HOT MIX ASPHALTIC PAVEMENT
   150mm – 19mm CRUSHED GRAVEL
   300mm – 150mm PIT RUN GRAVEL
2. ROADS TO BE RESTORED TO ORIGINAL ALIGNMENT AND CONDITION.
3. ADJUST EXISTING LID TO SUIT NEW GRADE. ENSURE EXISTING LID IS RATED FOR H-20 LOADING OTHERWISE REPLACE EXISTING LID WITH H-20 RATED LID.

NO	REVISIONS	DRN	CHK	DATE
3	ISSUED FOR 100% REVIEW	CLS	JTK	2013.02.26
1	ISSUED FOR 90% REVIEW	CLS	JTK	2013.01.30
2	ISSUED FOR 60% REVIEW	CLS	MY	2012.12.20

DRN	CLS
DES	MY
CHK	MY
APP	MY

DATE	2012.01.24
PROJECT NO	112180002
FILENAME	C-101.DWG
SHEET No.	
DRAWING NO	C-101

DISTRICT OF SUMMERLAND
WASTEWATER TREATMENT FACILITY UPGRADE

GRIT REMOVAL PROCESS UPGRADE
SITE GRADING

PREPARED FOR

DISTRICT OF SUMMERLAND

PREPARED BY

Stantec Consulting Ltd.
Suite 400
1620 Dickson Avenue
Kelowna, British Columbia
V1Y 7G5
Phone: (250) 860-3225
Fax: (250) 860-3387
www.stantec.com

Stantec

U:\active\112180002_summerland_wwtp\civil\drawing\sheet\Grit Removal Process Drawings\C-101.dwg
2/26/2013 1:29 PM

ORIGINAL SHEET – Oce D (22" x 34")

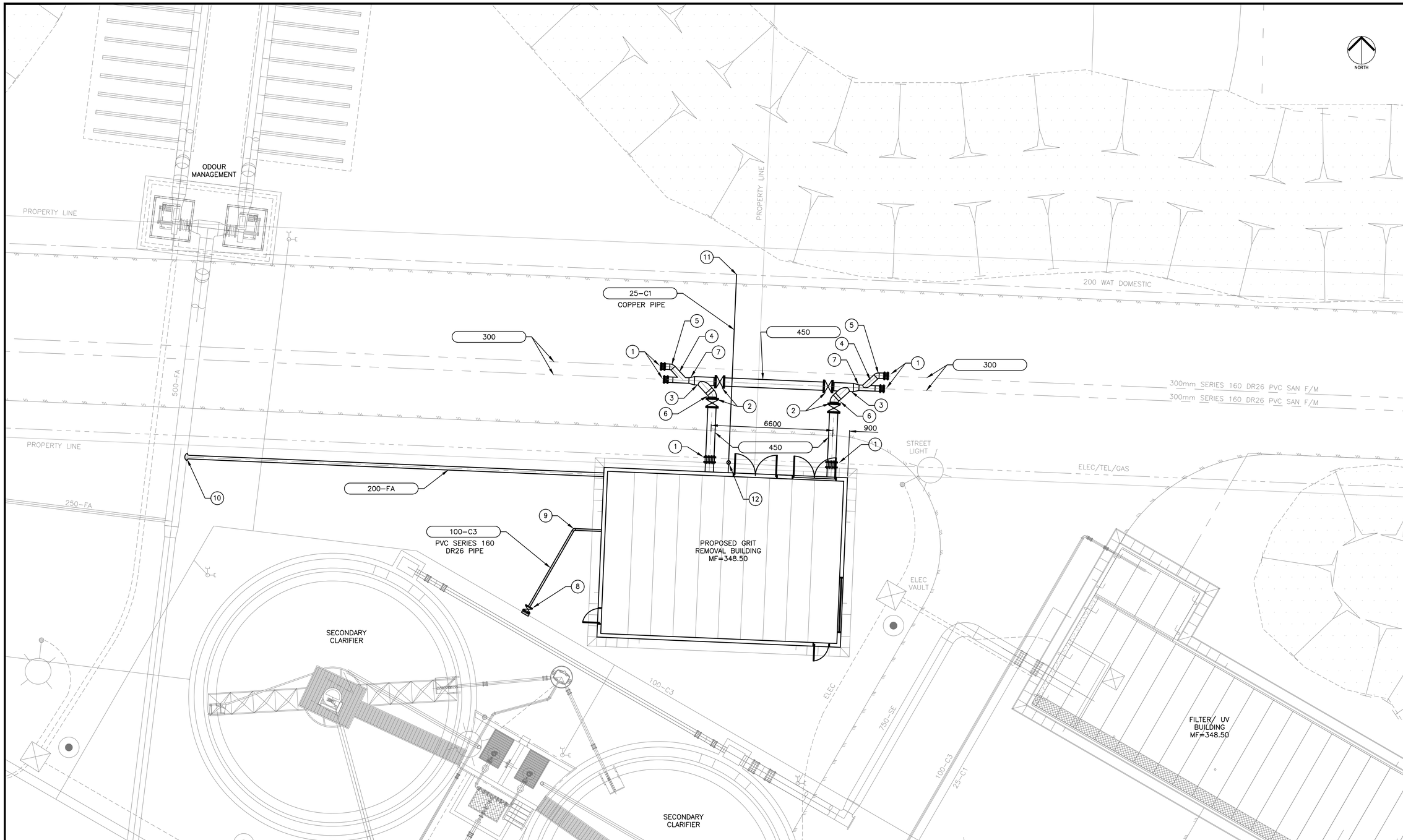

YARD PIPING PLAN

SCALE 1:100

LEGEND:

(15)	KEY NOTE
——	PROPOSED PIPING
⋈	VALVE
D	REDUCER

KEY NOTES

1. FLEXIBLE COUPLING (VARIOUS SIZES)
2. 450mmø PLUG VALVE c/w THRUST BLOCK
3. 450mmø WYE c/w THRUST BLOCK
4. 300mmø WYE c/w THRUST BLOCK
5. 300mmø 45° (LONG RADIUS) BEND c/w THRUST BLOCK
6. 450mmø 45° (LONG RADIUS) BEND c/w THRUST BLOCK
7. 450mmø x 300mmø REDUCER
8. CONNECT TO EX. 100mmø C3 WATER MAIN WITH HOT TAP SADDLE AND 100mmø GATE VALVE
9. 100mmø 45° & 22.5° BEND c/w THRUST BLOCK
10. CONNECT TO EX. 500mmø FOUL AIR LINE
11. CONNECT TO EX. 200mm DOMESTIC WATER MAIN c/w 25mm CORP. STOP & SADDLE
12. 25mmø CURB STOP

DATE	2012.01.24
PROJECT NO	112180002
FILENAME	C-102.DWG
SHEET No.	
DRAWING NO	C-102

DISTRICT OF SUMMERLAND
WASTEWATER TREATMENT FACILITY UPGRADE

GRIT REMOVAL PROCESS UPGRADE
YARD PIPING

PREPARED FOR

DISTRICT OF SUMMERLAND
EASTERN GATEWAY, CANADA

PREPARED BY

Stantec Consulting Ltd.
Suite 400
1620 Dickson Avenue
Kelowna, BC V1Y 0P2
Phone: (250) 860-3225
Fax: (250) 860-3367
www.stantec.com
Stantec

NO	REVISIONS	DRN	CHK	DATE
3	ISSUED FOR 100% REVIEW	CLS	JTK	2013.02.26
1	ISSUED FOR 90% REVIEW	CLS	JTK	2013.01.30
2	ISSUED FOR 60% REVIEW	CLS	MY	2012.12.20

DRN	CLS	2012.07.27
DES	MY	2012.01.24
CHK	MY	
APP	MY	

U:\active\112180002_summerland_wwtp\civil\drawing\sheet\Grit Removal Process Drawings\C-102.dwg
2/26/2013 1:30 PM

ORIGINAL SHEET - Oce D (22" x 34")

GENERAL

General

1. The contractor is to verify all dimensions prior to commencement of work. Do not scale from drawings. Structural drawings are to be read in conjunction with the structural specifications, & with architectural, mechanical, electrical & civil drawings & specifications. Notify the engineer of any discrepancies.
2. The structural drawings do not show components necessary for construction safety. The contractor is responsible for safety on & about the job site. Comply with the Workers Compensation Board Industrial Health & Safety Regulations. The contractor is responsible for design & erection of falsework, shoring, & bracing required for the stability & safety of the structure during construction.
3. Obtain engineer's approval before boring, cutting or sleeving load-bearing members, unless noted otherwise.

Design Criteria

Structural engineering design criteria are in accordance with Division B, Part 4 of the British Columbia Building Code 2006

1. Building Importance Category =
2. Live Loads:
   (a) Floor Live Load (Occupancy) — 4.8 kPa
   (b) Roof Live Load (Snowload) — Ss = 1.3 kPa; Sr = 0.1 kPa; S = 1.14 kPa + Accumulation
   (c) Wind Load — q(50) 0.45 kPa

   *Note: Concentrated loads are to be applied over an area of 750mm x 750mm. The worst case of uniform or concentrated load shall be used for the design of structural members.
3. Seismic Criteria:
   - Site Class from Geotechnical Report = E
   - Local Seismic Data Sa(0.2) = 0.28; Sa (0.5) = 0.18; Sa (1.0) = 0.11; Sa (2.0) = 0.065

Field Review

1. Notify Stantec Consulting Ltd. (Stantec) 48 hours in advance for field review & inspection of the following items:
   - reinforcing steel (walls & columns): before each pour
   - reinforcing steel (slabs, ftgs, beams): before each pour
   - masonry & reinforcing steel: before each pour
   - wood framing: before covering up
   - steel decking: before covering up
   - structural steel: before covering or loading
   - light gauge steel framing: before covering up
2. At the discretion of the engineer, wood trusses, steel deck, structural steel & connections may be required to be inspected by an independent testing agency at the expense of the owner.
3. Inspections shall be in accordance with the requirements of the British Columbia Building Code, 2006. Extra time or cost to Stantec due to deficient works requiring remedial action shall be borne by the contractor. Extra inspections required due to incomplete or deficient works shall be charged to the contractor.

Shop Drawings

1. Manufacturers of all structural elements shall submit complete shop drawings signed & sealed by a P. Eng registered in British Columbia. Allow 2 weeks for review. The professional responsible for sealing the shop drawings shall inspect the designed components for conformance. Shop drawing submittals shall be in the same system of units as the structural drawings.

Existing Structures

1. The contractor is responsible for temporarily supporting any existing adjacent buildings during construction. Any underpinning/bracing required to maintain the stability of the adjacent structure shall be designed by a professional engineer registered in the province of British Columbia. Submit 4 copies of design drawings, sealed by a professional engineer to Stantec for review.
2. Dimensions pertaining to existing structures shall be verified in the field by the contractor, prior to the commencement of construction & fabrication. Stantec is to be notified of any discrepancies.
3. The contractor shall, at his own expense, repair any damage to the existing structure, equipment & finishes caused by the construction activities. Repairs shall be subject to the architect's approval.

Building Components Designed by Others

1. These requirements apply to contractors providing secondary or proprietary components for the building which are not part of the primary structure shown on the structural drawings, but which require structural design. Secondary building components include but are not limited to, the following items:
   - exterior windows, glazing systems, cladding & back-up framing
   - handrails & guards, benches, lightposts, planters, flag posts
   - architectural precast concrete
   - brick & block veneer & reinforcing, non-structural masonry
   - skylights
   - interior & exterior non-load bearing steel stud walls
   - elevators & support beams, equipment supports
2. The subcontractor shall be responsible for the design of the secondary components. All shop drawings for the secondary components shall be sealed & signed by a professional engineer registered in the province of British Columbia, & submitted to the prime consultant for coordination review. Shop drawings shall clearly indicate any loads imparted to the structure.
3. Secondary components shall be designed to meet the requirements of the British Columbia Building Code & applicable design standards. Connections to the primary structure shall accommodate deflections in the primary structure. The contractor may seek guidance from the Engineer of Record as to design loads, deflections, etc.
4. The engineer responsible for the design of the components shall provide supervision of the manufacture & installation of those components. That professional engineer shall also issue a letter to the Prime Consultant providing assurance that the components have been designed, constructed, & installed in accordance with the B.C. Building Code & in accordance with the signed & sealed shop drawings.

FOUNDATIONS

1. Refer to Geotechnical report dated 11/05/2012 prepared Beacon Geotechnical.
2. All footings shall be constructed on approved native subgrade. Footings have been designed for an allowable bearing pressure of
3. Provide 750 mm frost protection to u/s of footings.
4. Footings are to be level & horizontal. Bearing surfaces shall be hand trimmed to remove all loose material. Do not place concrete in excavations containing mud, water or other deleterious materials. The bearing surface must be inspected & approved by the Geotechnical engineer.
5. Prior to placement of new fill, the site is to be excavated or stripped of any topsoil and/or existing fill materials, & the area proof rolled with a heavy vehicle. Any soft areas detected by proof rolling shall be excavated.
6. Fill materials under slabs on grade shall be 75mm minus pit run gravel, compacted to a uniform dry density of 95% of standard proctor density. Fill to 150mm below underside of concrete slab. A minimum 150mm blanket of free draining, well graded, 25mm minus granular material shall be placed immediately below the slab & compacted to 95% of standard proctor dry density.
7. Centre footings under columns & walls unless otherwise shown.
8. All dowels & anchor bolts are to be located & secured in place prior to placing concrete. Use a template to ensure correct placement.

CONCRETE

Concrete Work

1. All concrete is to be ready mixed conforming to CAN/CSA A23.1/A23.2. Refer to Tables 1 & 2 for water:cement ratio & air content. Cement is to confirm to CAN/CSA-A5, type 10 normal weight Portland cement. Maximum slump prior to the addition of plasticizers shall be 75mm for all mixes. Use admixtures only with written approval of the Engineer. The use of type F or CI flyash as a supplementary cementing material is encouraged. Proposed mix designs shall be submitted to the Engineer for approval.

LOCATION	EXPOSURE CLASS	28 DAY STRENGTH	MAX. COARSE AGGREGATE
Footings & foundation walls	S - 2	25 MPa	20 mm
Slabs on grade, Interior	S - 2	30 MPa	20 mm
Slabs on grade, Exterior	S - 2	32 MPa	20 mm
Concrete topping	S - 2	30 MPa	10 mm
Suspended slabs, beams, columns and channels	S - 2	35 MPa	20 mm

3. Vibrate all concrete except slabs less than 150mm thick.
4. Appoint a CSA certified materials testing laboratory to review concrete mixes & to gather & test concrete cylinders. One set of 3 cylinders is to be made for each pour of 40 cubic meters, subject to a minimum of 1 set per day. Copies of test results are to be sent to the engineer & contractor.
5. Shoring & falsework to be carried out in accordance with the Workers Compensation Board of British Columbia Industrial Health & Safety Regulations. Formwork design is the contractor's responsibility.
6. Concrete will be rejected where time between batching & placing exceeds 2 hours.
7. Provide construction joints as shown on the drawings or as directed by the engineer.
8. Slab on grade joints shall be sawcuts spaced as per plan. The architect shall approve the joint layout. Seal with flexible joint sealer to prevent the ingress of water. Sawcut joints as soon as possible after pouring. Depth of sawcut to be 1/4 to 1/3 of the slab thickness. Maximum spacing of joints to be 4500mm.
9. Do not add water to the concrete on site.
10. Upon removal of formwork fill form tie holes with a non-shrink grout or for conical ties use a recessed plug.
11. All concrete work performed in cold weather to be prepared according to CSA-A23.1.
12. Proposed construction joint locations, if not indicated on the drawings, shall be submitted to Stantec for review prior to construction.
13. Chamfer exposed edges of columns & beams 20mm unless noted otherwise.
14. All dowels, anchor bolts & embed plates shall be placed by template before the concrete is poured. Wet-placing is not permitted.
15. Removal of forms is not permitted until 24 hours after the pour for columns, walls, footings & beam sides, & until 28 days after the pour for beam soffits & suspended slabs. The 28 day waiting period may be shortened if proper re-sorting is carried out, & designed by a Structural Engineer registered in the Province of British Columbia, or if the concrete has attained sufficient strength (demonstrated by the testing of field-cured cylinders) as determined by Stantec Consulting Ltd.

Concrete Finishes

1. Vibrate & screed all concrete slabs including slabs on grade & toppings. Float surface with wood or metal floats. Install plastic tee crack control joints as indicated on plan or at min. 4.5m x 4.5m grid. Steel power trowel to smooth even surface with a tolerance of 3mm in 3m. Keep moist for 7 days.
2. Concrete slabs to receive quarry tile or ceramic tile shall be screeded & wood float finished to true lines & levels & left ready to receive finish. Depress slabs to accommodate finish. Refer to architectural drawings for extent & location of depressed slabs.
3. All exposed concrete walls & columns shall be formed with medium density overlaid plywood forms. Form ties shall be snap ties with 20mm diameter by 20mm deep cones. Grind off all high spots from the finished surfaces. Sac rub to a smooth surface ready for paint finish.

Reinforcing

1. Reinforcing is to be billet steel conforming to CSA G30.3, G30.5, G30.14, G30.15 & CAN/CSA G30.18 400R MPa grade. Welded wire mesh to CAN/CSA G30.5. Fabricate & place reinforcement to CSA A23.1. Reinforcement shall be placed & bent in accordance with CSA CAN3-A23.3. Tie bars securely in place to prevent displacement, supporting the reinforcement as necessary on suitable chairs, spacers & ties to maintain the reinforcement at the stipulated location with the specified cover.
2. Provide clear cover for all reinforcing steel as follows:

EXPOSURE CONDITION	N*	F-1, F-2, S-1, S-2	C-XL, C-1, C-3, A-1, A-2, A-3
Cast against and permanently exposed to earth	-	75mm	75mm
Beams, girders, columns, and piles	30mm	40mm	60mm
Slabs, walls, joists, shells, and folded plates	20mm	40mm	60mm
Ratio of covered to nominal bar diameter	1.0	1.5	2.0
Ratio of cover to nominal maximum aggregate size	1.0	1.5	2.0

3. Splice/lap lengths for reinforcing bars shall be as shown, unless noted otherwise

BAR SPLICE / LAP LENGTHS:

SIZE	25 MPa	30 MPa	35 MPa
10M	380	350	330
15M	560	510	490
20M	760	690	640
25M	1170	1070	990
30M	1410	1290	1190

4. Unless noted otherwise, all concrete walls are to be reinforced as follows:

WALL THICKNESS	VERTICAL REINF.	HORIZONTAL REINF.
200mm	15M @ 500 O.C.	15M @ 400 O.C.
250mm	15M @ 400 O.C.	15M @ 300 O.C.
300mm	15M @ 500 O.C. each face	15M @ 500 O.C. each face

5. Slab temperature & shrinkage reinforcement shall be provided perpendicular to the main bars in all one-way spanning slabs as follows, unless noted otherwise on plans:

SLAB THICKNESS	REINFORCEMENT (fy = 400 MPa)
100mm to 150mm	10M @ 300mm O.C.
150mm to 200mm	10M @ 250mm O.C. 150 min. to 200mm
200mm to 250mm	10M @ 400mm O.C. 200 min. to 250mm

6. All wall reinforcing is to be centred in walls unless otherwise shown.
7. At intersections of elements such as walls, beams & slabs, provide continuity steel for each reinforcing bar by means of corner bars or dowels equal in size to the largest size of intersecting bars, unless otherwise noted. Add 2-15M vertical bars at ends of walls.
8. Add 2 - 15M bars parallel to each side of all openings in walls & slabs, extending 600mm beyond corners unless otherwise shown. In addition, for openings larger than 300 mm provide 15M diagonal bars, 1200 mm long across corners.
9. Edges of all slabs shall have 2 - 15M top & bottom continuous lapped 400mm.
10. All reinforcing bars are to be accurately placed, adequately supported, & secured against displacement prior to placing of concrete.
11. Unless noted otherwise on the drawings all interior slabs on grade to be reinforced with 15M @ 400 O.C. E.W. & to be chaired in the middle of the slab.
12. Unless noted otherwise on the drawings all exterior slabs on grade to be reinforced with 15M @ 400 O.C. E.W. & to be chaired in the middle of the slab.
13. Splice/lap lengths for welded wire fabric to be two cross wire spacings plus 50mm, minimum.
14. Adjust reinforcing bar spacing laterally at openings to avoid cutting, up to a maximum of twice the nominal spacing. If this spacing is exceeded, cut bars & add one full-length bar for each bar cut to the side of the opening nearest the location of the cut bar(s).
15. When concrete surfaces are exposed to weather, earth, salts or chemicals, use only non-corroding chairs & bar supports.
16. Reinforcing bar designations:

2-20M 3200	Two 3200 long 20M bars
4-C15M 1600	Four 15M bars w/ a 90Astandard hook at one end, 1600mm long (including hook)
2-15M H1E 600	Two 15M bars. each w/ a 90Astandard hook at one end, hook length is 600mm

17. Welding of reinforcing shall be in conformance with CSA W186. Welding of reinforcing is prohibited, unless specifically noted on the drawings or approved by the engineer.
18. Refer to architectural, electrical & mechanical drawings for sleeves, inserts, etc. to be encased in concrete. Unless otherwise approved by the structural engineer, pipes, conduits & sleeves embedded in concrete shall be installed as follows:
    - Centre to centre spacing of pipes to be not less than 2 diameters. Clear spacing to be less than 100mm.
    - Centre to centre spacing between parallel conduit & reinforcing bars to be not less than 3 pipe diameters.
    - Added reinforcing at points of congestion as directed by the engineer.
    - For conduit in the place of slabs & walls, locate between top & bottom or each face of reinforcing.
    - Maximum size in one layer to be less than 1/3 of the concrete thickness.
    - Maximum size of each conduit in two layers crossing to be less than 1/4 of the concrete thickness. Three layers crossing will not be permitted.
    - Columns: maximum size of conduit or other fittings not to exceed 4% of the cross sectional area. Embedded piping will not be permitted.
    - Beams: maximum size of conduit to be less that 4% of the cross sectional area. Sleeves & embedded piping as directed by the structural engineer.

Precast Concrete

1. All precast concrete & materials to conform to CSA A23.4.
2. Precast concrete elements & any proprietary connections are to be designed, supplied & installed by the contractor in accordance with CSA A23.3 or CSA A370. Submit shop drawings as per general notes. All connections exposed to earth, weather or liquid to be stainless steel or galvanized, G210 minimum coating (610 grams per square metre).
3. The precast contractor is responsible for design, supply & installation of all additional reinforcing & connections required for transportation, handling & erection of all units, & for design, supply & installation of all bolts, inserts, sleeves, conduit etc. as required by other trades. Refer to structural, architectural, mechanical, electrical, civil & all other relevant drawings for locations & sizes of inserts & openings.
4. Check drawings from all other disciplines for locations & sizes of inserts & openings.
5. The precast contractor shall provide all bearing plates required for the precast units. Bearing plates shall be set by the general contractor.
6. The precast contractor is responsible for the grouting of all units. Use non-shrink, non-metallic grout with a minimum 28 day strength of 50 MPa.

MASONRY

1. All materials & construction methods are to be in accordance with the British Columbia Building Code, latest edition & the following CSA standards: CAN/CSA -S304.1 "Masonry Design for Buildings", CAN3-A370 "Connectors for Masonry" & CAN3-A371 "Masonry Construction for Buildings".
2. Hollow load-bearing units shall comply with CSA-A165.1 normal weight, 15 MPa compressive strength based on net area.
3. Masonry mortar to be type S conforming to CSA-A179. Proportion specification shall apply to field mixed mortar.
4. Masonry grout design strength 20 MPa at 28 days exposure class F-2, cement type 10, air 5-8%, slump 200-280mm, 10mm aggregate.
5. Brick ties are to be minimum 6oz hot dipped galvanized conforming to CAN3-A370. Space at 400mm O.C. horizontally & 600mm O.C. vertically.
6. Masonry wire reinforcing to be 3.8mm (9 ga.) diameter ladder-type reinforcing conforming to CSA G30.5 "Welded Steel Wire Fabric for Concrete Reinforcement". Deformed bar reinforcing to conform to CSA-G30.18, grade 400R.
7. 200mm thick masonry wall reinforcing is to be as follows unless otherwise shown:

Vertical reinforcing:	15M @ 800 O.C. (load -bearing walls) 1-15M @ 1200 O.C. (non load-bearing walls) 1- 15M at corners, intersections, & ends of walls Vertical lap to be 650mm for 15M, 900mm for 20M.
Horizontal reinforcing	2-15M continuous @ 2400 O.C. max, & at top of walls, lap 600mm 9 ga. wire ladder reinforcing @ 400 O.C., lap 500mm
Additional	1-15M vert at each side of openings 1-20M vert in each cell of pilasters 2-15M horiz. above & below all openings, unless noted otherwise, extending 600mm beyond corners.

8. Splice reinforcing & embed dowels as follows:
   - dowel embedment (including hook length) = 500 for 20M bars & 400 for 15M bars
   - splice length = 900 for 20M bars & 650 for 15M bars
9. Provide knock-out type bond beam units at all floor & roof lines, & parapets & at a maximum of 2400mm O.C. Bond beam reinforcing is to be continuous at corners & intersections. Use galvanized expanded metal lath to form underside of bond beams. Vertical reinforcement shall be continuous through bond beams & lintels. Provide corner bars for all bond beam reinforcing, & splice as per note 8.
10. Provide dowels in foundation to match vertical wall reinforcement. Splice as per note 8, unless noted otherwise.
11. Cells to be grouted are to be kept clean of mortar. Cells shall be grouted in max. 1200mm lifts without cleanouts & 2400mm lifts with cleanouts. Puddle or vibrate to completely fill cells. Re-vibrate after 10 to 40 minutes, when masonry has absorbed any excess water. Add grout to filled cores to bring back to level.
12. Grout cells containing reinforcement & bolts.
13. Concrete block units are to be installed in running bond. Intersecting walls are to have alternate interlocking coursing for a full masonry bond.
14. All exposed or concealed mortar joints are to be tooled concave. Maximum joint width 10mm unless noted otherwise. Point & compact joints with a round tool bar.
15. Build masonry true to line, plumb, square & level, with vertical joints in proper alignment.
16. Cut units with a masonry saw. Broken units will be rejected.
17. Heat materials & protect work in accordance with CSA-A371 when temperature is below 5 degrees C. Avoid excessive moisture loss from mortar at temperatures higher than 27 degrees C. Do not wet concrete masonry before or during construction.
18. Provide vertical control joints at a maximum spacing of 7500mm or as shown on drawings. Discontinue bond beam reinforcing at control joints except at roof or floor deck levels. Offset control joints 600mm from a bearing plate or edge of opening.
19. Provide adequate temporary bracing for masonry walls until fully connected to the structure & until design strength of mortar & grout is achieved.
20. Fill all bond beams, reinforced cores & cores at anchor bolts or embedded hardware with masonry grout. Provide cleanouts at the bottom of cores to be grouted.

ABBREVIATIONS

A.B.	anchor bolt
A.F.	alternate faces
ARCH	architectural
BLDG	building
BOT	bottom
C.I.P.	cast in place
CL	centre line
C.J.	control joint
COL	column
CONC	concrete
CONST. JT.	construction joint
CONT	continuous
C/W	complete with
DP	deep
DWG	drawing
EA	each
E.F.	each face
E.W.	each way
ELEV.	elevation
EMBED	embedment
EQUIP	equipment
FDN	foundation
F.F.	far face
FLR	floor
FTG	footing
GA	gauge
GALV	galvanized
GL	gridline
H1E	hooked 1 end
H2E	hooked both ends
H & HORIZ.	horizontal
JT	joint
KG	kilogram
LONG.	longitudinal bars
MAX.	maximum
MIN.	minimum
MFR	manufacturer
MPa	megapascal
N.F.	near face
NTS	not to scale
O.C.	on centre
OWSJ	open Web steel joist
PL	plate
REINF.	reinforcing
REQ'D	required
R/W	reinforce with
SECT	section
SIM.	similar
S.O.G.	slab on grade
SPEC	specification
SQ	square
STAGG	staggered
STD	standard
STIFF.	stiffener
STL	steel
STRUCT.	structural
SYMM	symmetrical
THK	thick
T.O.F.	top of footing
T.O.S.	top of steel
TRANS.	transverse bars
TYP	typical
T&B	top & bottom
U.N.O.	unless noted otherwise
U/S	underside
V & VERT.	vertical
W.W.M.	welded wire mesh

DATE	2012.XX.XX
PROJECT NO	112180002
FILENAME	s_112180002.DWG
SHEET No.	
DRAWING NO	S-001

DISTRICT OF SUMMERLAND
WASTEWATER TREATMENT FACILITY UPGRADE

GRIT REMOVAL PROCESS UPGRADE
GENERAL NOTES

PREPARED FOR: DISTRICT OF SUMMERLAND

PREPARED BY: Stantec Consulting Ltd.
Suite 400
1620 Dickson Avenue
Kelowna, BC V1Y 9Y2
Phone (250) 860-9225
Fax (250) 868-3387
www.stantec.com

NO.	REVISIONS	DRN	CHK	DATE
3	ISSUED FOR 100% REVIEW	AR	BA	2013.02.26
2	ISSUED FOR 90%	AR	BA	2013.01.30
1	ISSUED FOR REVIEW	AR	LL	2012.XX.XX

DRN	AR	2012.01.07
DES	BA	2012.01.07
CHK	XX	
APP	XX	

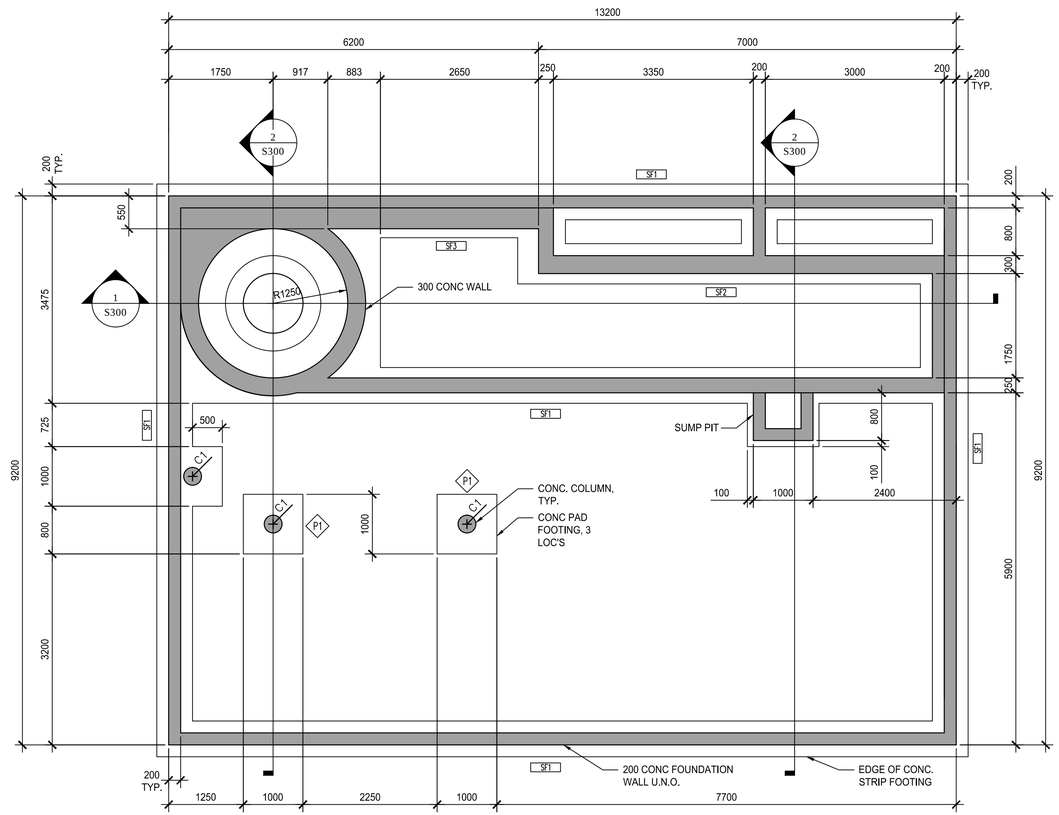

1 FOUNDATION PLAN
1:50

FOUNDATION REINFORCING SCHEDULE				
MARK	REINFORCING	WIDTH	LENGTH	HEIGHT
SF1	3 - 15M LONGITUDINAL, 15M @ 400 TRANSVERSE	600	N/A	250
SF2	3 - 15M LONGITUDINAL, 15M @ 400 TRANSVERSE	700	N/A	250
SF3	4 - 15M LONGITUDINAL, 15M @ 400 TRANSVERSE	950	N/A	250
P1	4 -15M EW, BOTTOM	1000	1000	250
C1	4 - 15M VERTICAL C/W 10M TIES @ 300	N/A	N/A	N/A

DATE 2012.XX.XX
PROJECT NO 112180002
FILENAME s_112180002.DWG
SHEET No.
DRAWING NO S-101

DISTRICT OF SUMMERLAND
WASTEWATER TREATMENT FACILITY UPGRADE

GRIT REMOVAL PROCESS UPGRADE
FOUNDATION PLAN

PREPARED FOR
DISTRICT OF SUMMERLAND

PREPARED BY
Stantec Consulting Ltd.
Suite 400
1620 Dickson Avenue
Kelowna, BC V1Y 9Y2
Phone (250) 860-2225
Fax (250) 860-3387
www.stantec.com

NO	REVISIONS	DRN	CHK	DATE
3	ISSUED FOR 100% REVIEW	AR	BA	2013.02.26
2	ISSUED FOR 90% REVIEW	AR	BA	2013.01.30
1	ISSUED FOR REVIEW	AR	LL	2012.XX.XX

DRN	AR	2012.01.07
DES	BA	2012.01.07
CHK	XX	
APP	XX	

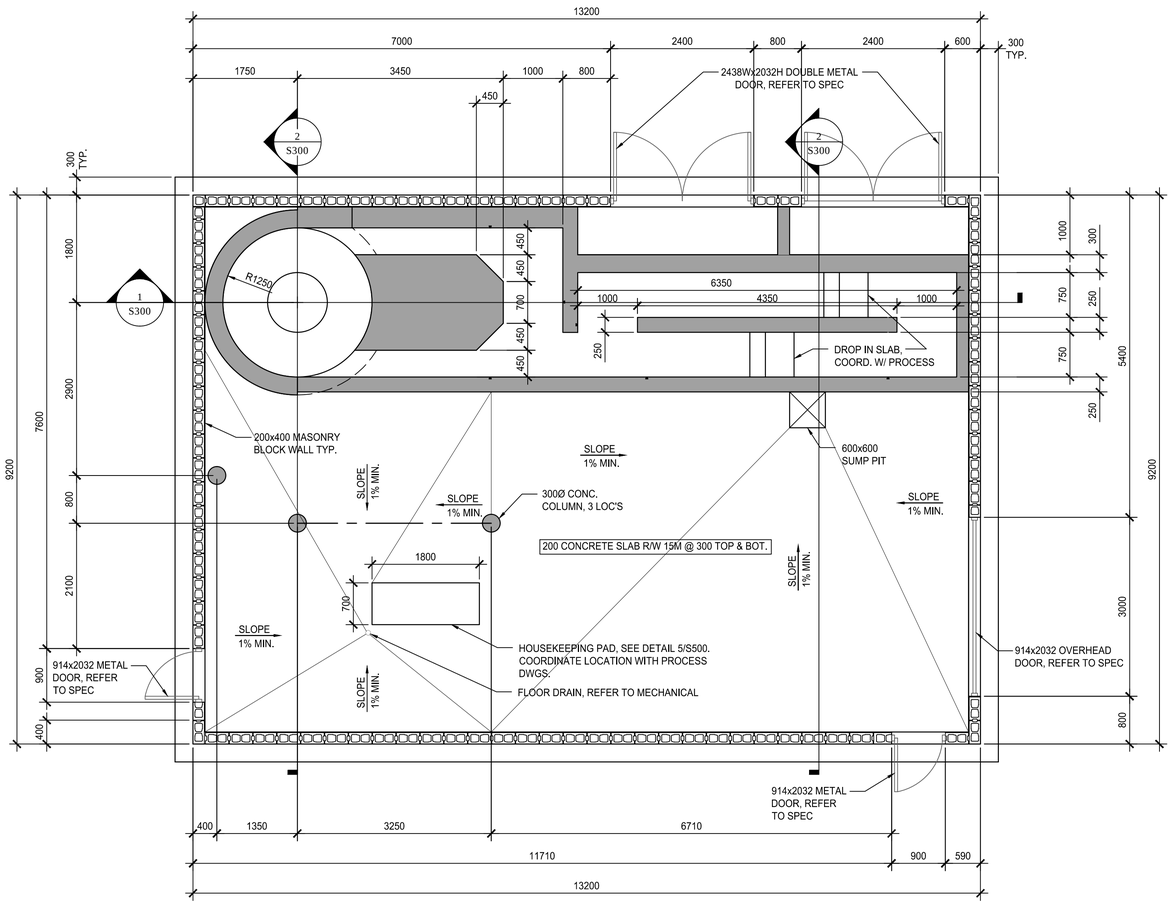

1 MAIN FLOOR PLAN
1:50

NOTES:
.1 COORDINATE ALL DOOR ROUGH OPENINGS WITH DOOR SUPPLIER.

NO	REVISIONS	DRN	CHK	DATE
3	ISSUED FOR 100% REVIEW	AR	BA	2013.02.26
2	ISSUED FOR 90%	AR	BA	2013.01.30
1	ISSUED FOR REVIEW	AR	LL	2012.XX.XX

DRN	AR 2012.01.07
DES	BA 2012.01.07
CHK	XX
APP	XX

PREPARED BY

Stantec Consulting Ltd.
Suite 400
1620 Dickson Avenue
Kelowna, BC V1Y 9Y2
Phone (250) 762-3225
Fax (250) 980-0387
www.stantec.com
Stantec

PREPARED FOR

DISTRICT OF SUMMERLAND

DISTRICT OF SUMMERLAND
WASTEWATER TREATMENT FACILITY UPGRADE

GRIT REMOVAL PROCESS UPGRADE
MAIN FLOOR PLAN

DATE	2012.XX.XX
PROJECT NO	112180002
FILENAME	s_112180002.DWG
SHEET No.	
DRAWING NO	**S-102**

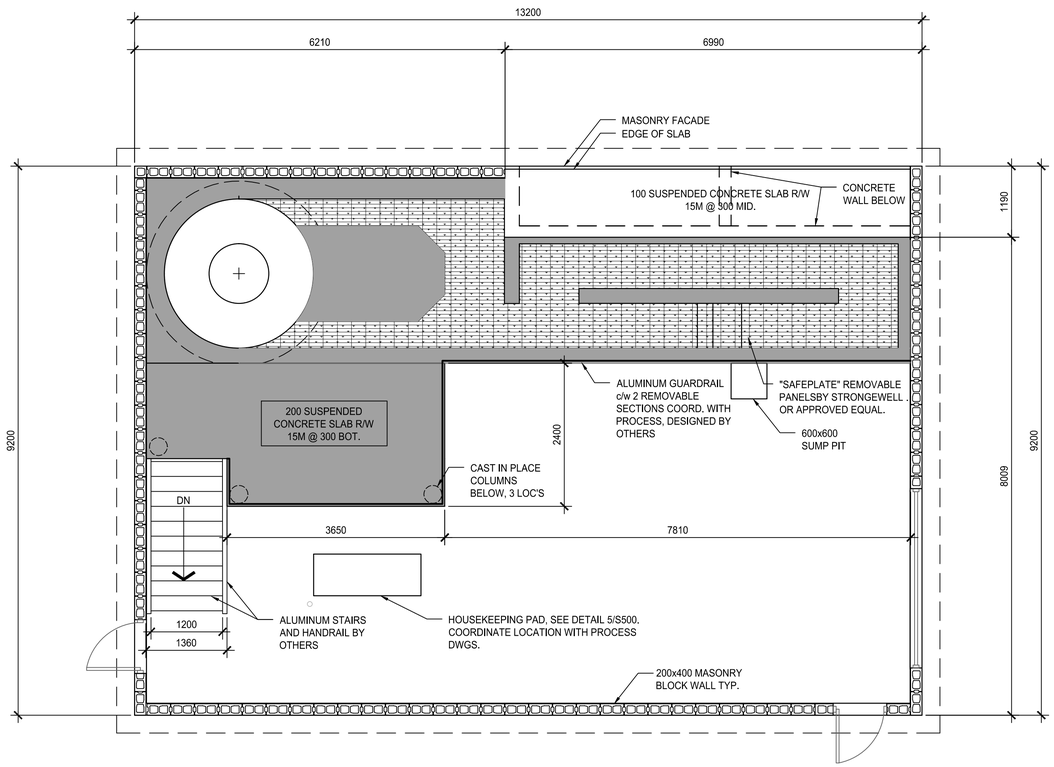

1 / –
MAIN FLOOR PLAN AT MEZZANINE
1:50

DATE	2012.XX.XX
PROJECT NO	112180002
FILENAME	s_112180002.DWG
SHEET No.	
DRAWING NO	S-103

DISTRICT OF SUMMERLAND
WASTEWATER TREATMENT FACILITY UPGRADE

GRIT REMOVAL PROCESS UPGRADE
MAINF FLOOR PLAN AT MEZZANINE

PREPARED FOR

DISTRICT OF SUMMERLAND

PREPARED BY

Stantec Consulting Ltd.
Suite 400
1620 Dickson Avenue
Kelowna, BC V1Y 9Y2
Phone (250) 860-9225
Fax (250) 860-3387
www.stantec.com
Stantec

NO	REVISIONS	DRN	CHK	DATE
3	ISSUED FOR 100% REVIEW	AR	BA	2013.02.26
2	ISSUED FOR 90%	AR	BA	2013.01.30
1	ISSUED FOR REVIEW	AR	LL	2012.XX.XX

DRN	AR	2012.01.07
DES	BA	2012.01.07
CHK	XX	
APP	XX	

SKYLIGHTS OVER THE EFFLUENT FILTER GALLERY ARE FABRICATED, FIXED STRUCTURALLY GLAZED, CURB MOUNT SKYLIGHT WITH MAINTENANCE FREE, ROLL-FORMED ALUMINUM EXTERIOR FRAME. SKYLIGHT SYSTEM STRUCTURALLY ADEQUATE TO SUPPORT SNOW AND WIND LOADS AS SPECIFIED BY BRITISH COLUMBIA BUILDING CODE 2012 OR LIVE LOADS OF 2.5kN AT MID POINT OF GLAZING WHICHEVER IS GREATER. THE MAXIMUM ALLOWABLE DEFLECTION OF ANY FRAMING MEMBER NORMAL TO THE PLANE OF GLASS SHALL NOT EXCEED L/175.

APPROVED PRODUCT: CVA ROOF HATCH SKYLIGHT BY VELUX.

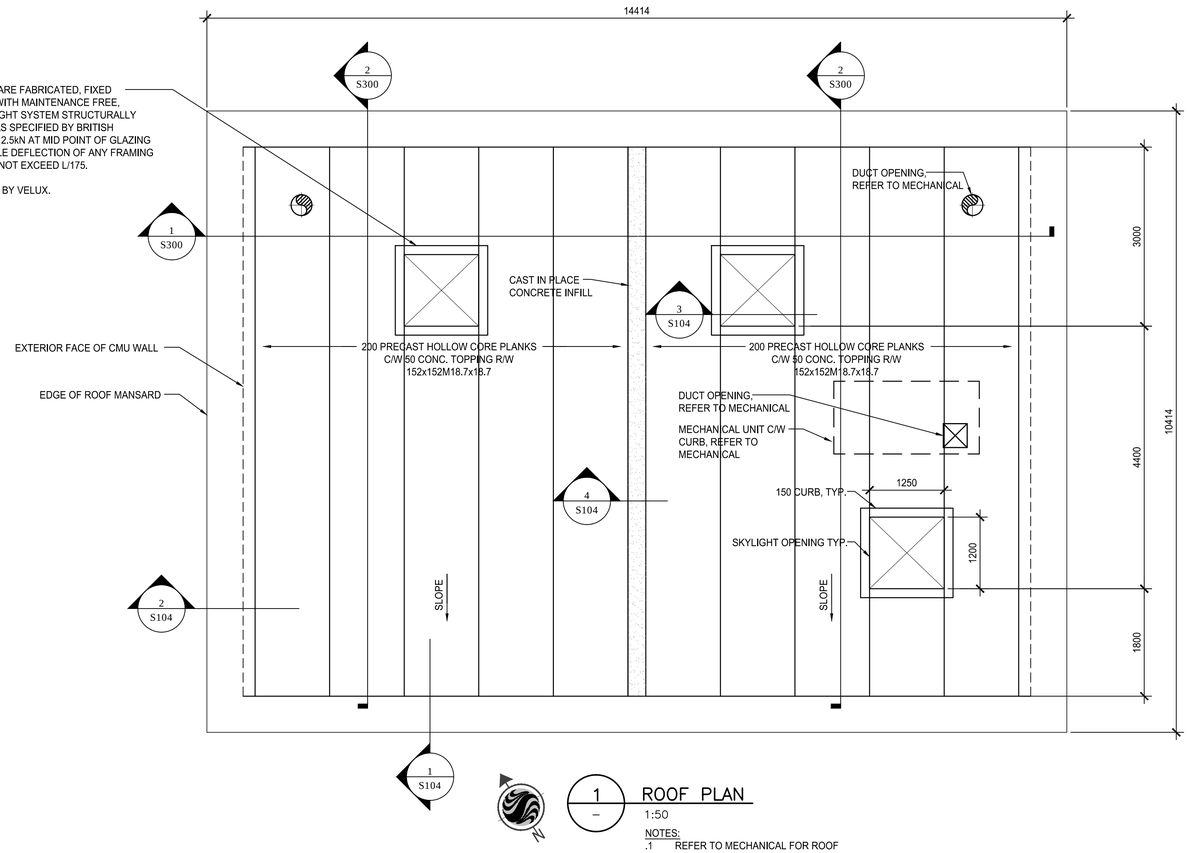

1 – ROOF PLAN
1:50

NOTES:
.1 REFER TO MECHANICAL FOR ROOF DRAIN LOCATIONS AND DETAILS.

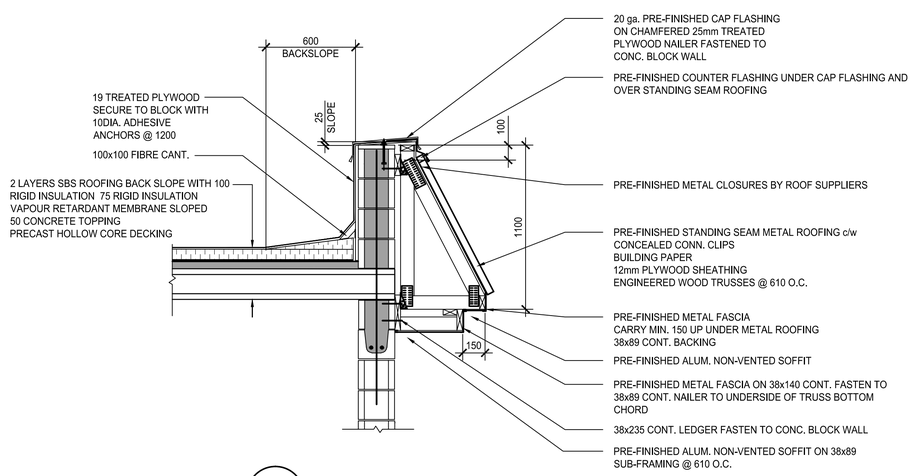

1 – MANSARD SECTION TYP.
1:20

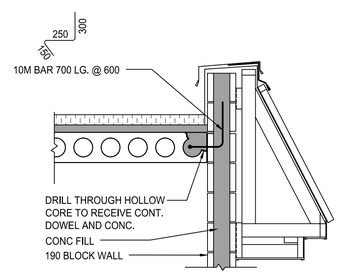

2 – MANSARD SECTION TYP.
1:20

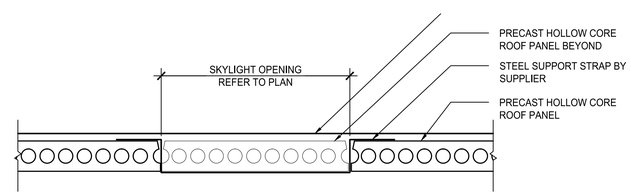

3 – HOLLOW CORE OPENING TYP.
1:20

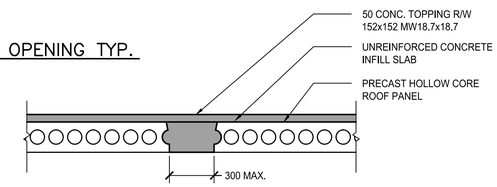

4 – SECTION
1:20

DATE 2012.XX.XX
PROJECT NO 112180002
FILENAME s_112180002.DWG
SHEET No.
DRAWING NO S-104

DISTRICT OF SUMMERLAND
WASTEWATER TREATMENT FACILITY UPGRADE

GRIT REMOVAL PROCESS UPGRADE
ROOF PLAN

PREPARED FOR
DISTRICT OF SUMMERLAND

PREPARED BY

Stantec Consulting Ltd.
Suite 400
1620 Dickson Avenue
Kelowna, BC V1Y 9Y2
Phone: (250) 980-5225
Fax: (250) 980-9387
www.stantec.com
Stantec

NO	REVISIONS	DRN	CHK	DATE
1	ISSUED FOR REVIEW	AR	LL	2012.XX.XX
2	ISSUED FOR 90% REVIEW	AR	BA	2013.01.30
3	ISSUED FOR 100% REVIEW	AR	BA	2013.02.26

DRN	AR	2012.01.07
DES	BA	2012.01.07
CHK	XX	
APP	XX	

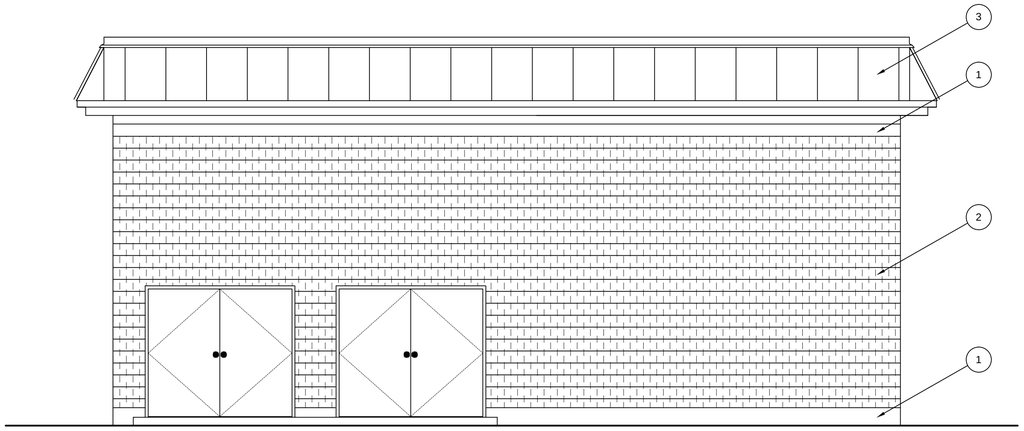

1 – NORTH ELEVATION
1:50

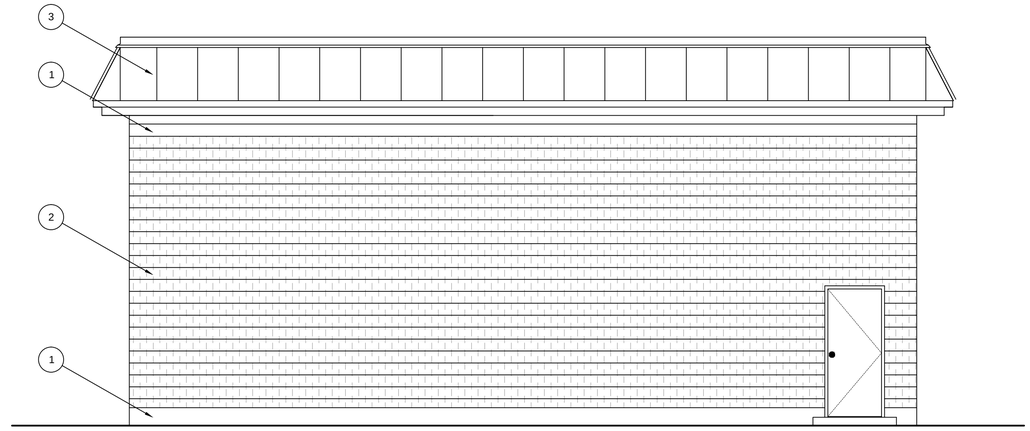

2 – SOUTH ELEVATION
1:50

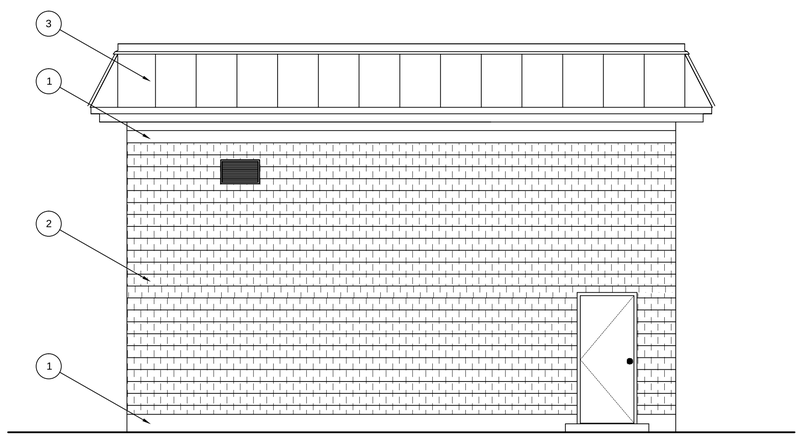

3 – WEST ELEVATION
1:50

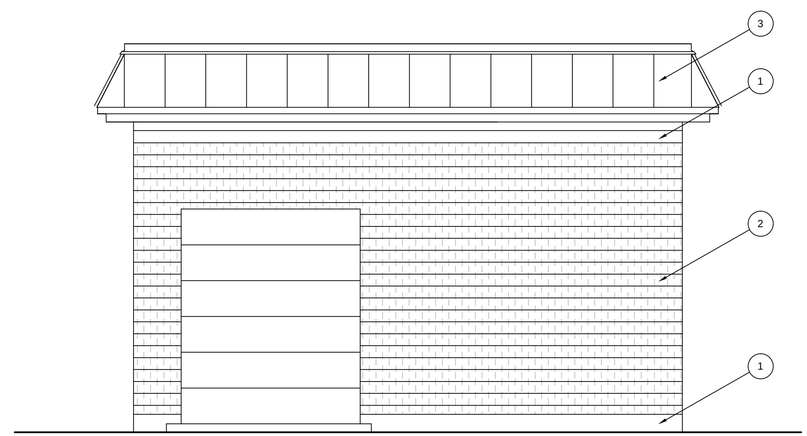

4 – EAST ELEVATION
1:50

KEY NOTES

1. SMOOTH FACED CONCRETE BLOCK
2. COLOURED SPLIT FACED CONCRETE BLOCK
3. PRE-FINISHED STANDING SEAM METAL ROOFING

NOTES:
1. MASONRY BLOCK TO MATCH EXISTING UV / FILTER BUILDING.
2. ALL FINISHES AND COLOURS TO MATCH EXISTING UV / FILTER BUILDING.

NO	REVISIONS	DRN	CHK	DATE
3	ISSUED FOR 100% REVIEW	AR	BA	2013.02.26
2	ISSUED FOR 90% REVIEW	AR	BA	2013.01.30
1	ISSUED FOR REVIEW	AR	LL	2012.XX.XX

DRN	AR	2012.01.07
DES	BA	2012.01.07
CHK	XX	
APP	XX	

PREPARED BY

Stantec Consulting Ltd.
Suite 400
1620 Dickson Avenue
Kelowna, BC V1Y 9Y2
Phone: (250) 862-2225
Fax: (250) 862-3367
www.stantec.com

Stantec

PREPARED FOR

DISTRICT OF SUMMERLAND

DISTRICT OF SUMMERLAND
WASTEWATER TREATMENT FACILITY UPGRADE

GRIT REMOVAL PROCESS UPGRADE ELEVATIONS

DATE	2012.XX.XX
PROJECT NO	112180002
FILENAME	s_112180002.DWG
SHEET No.	
DRAWING NO	S-105

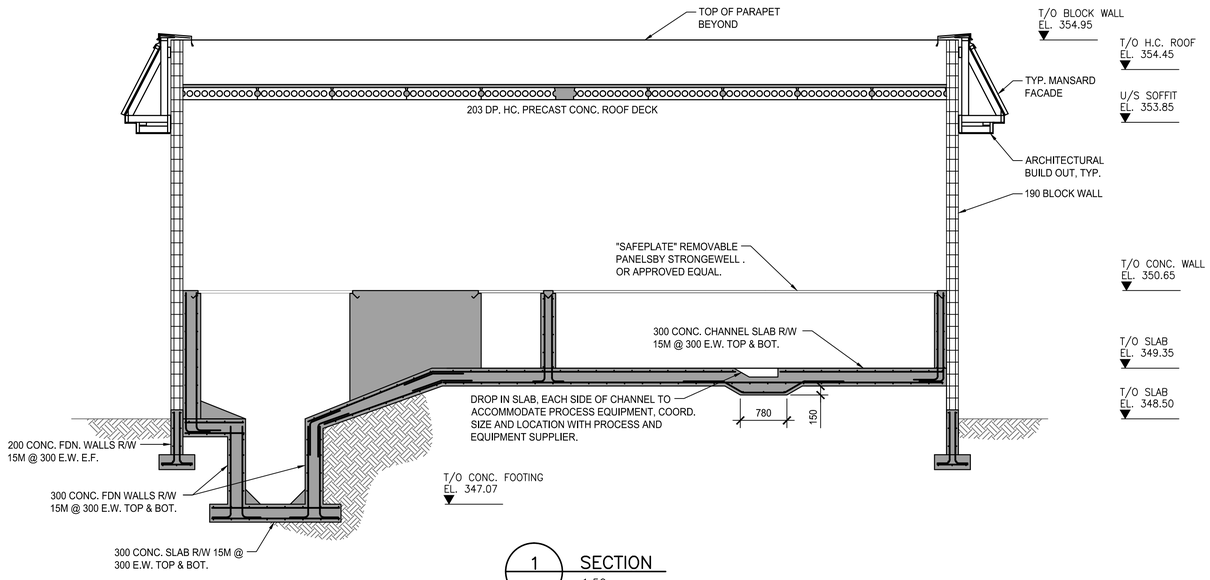

1 – SECTION
1:50

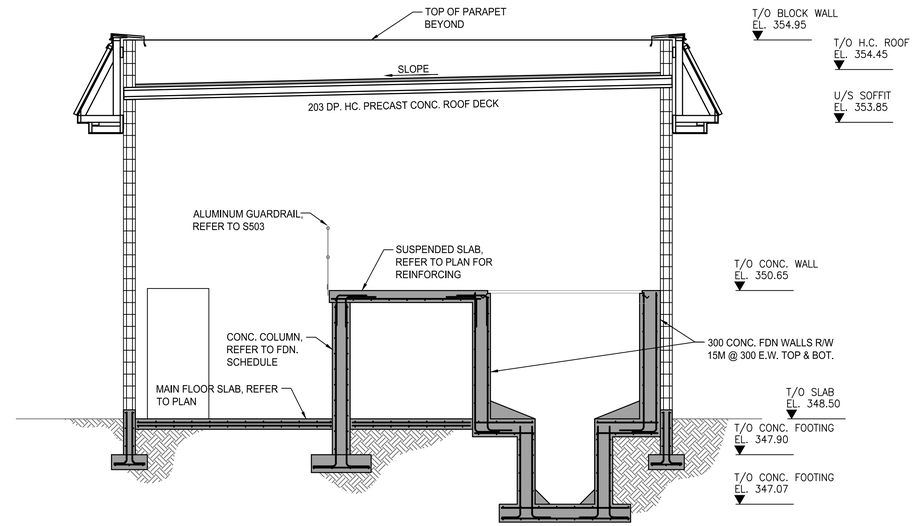

2 – SECTION
1:50

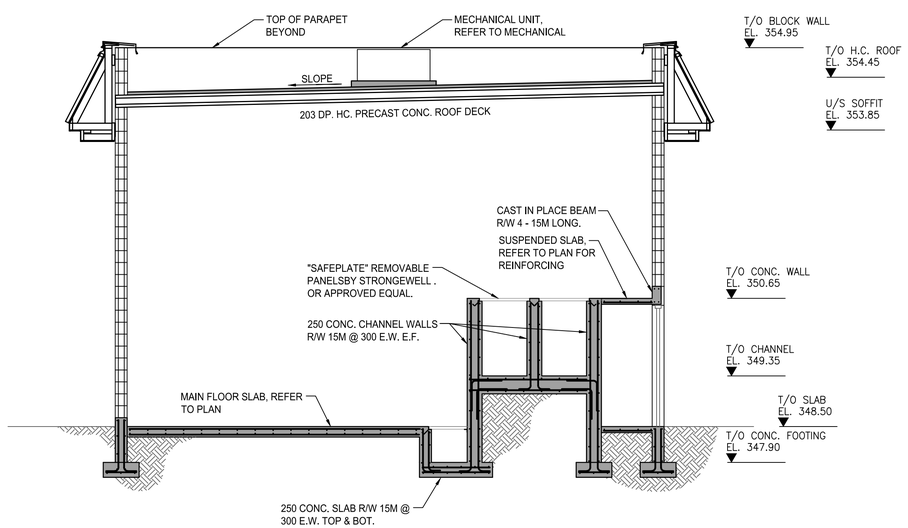

3 – SECTION
1:50

DATE 2012.XX.XX
PROJECT NO 112180002
FILENAME s_112180002.DWG
SHEET No.
DRAWING NO S300

DISTRICT OF SUMMERLAND
WASTEWATER TREATMENT FACILITY UPGRADE

FILTER PROCESS UPGRADE SECTIONS

PREPARED FOR
DISTRICT OF SUMMERLAND

PREPARED BY
Stantec Consulting Ltd.
Suite 400
1620 Dickson Avenue
Kelowna, BC V1Y 9Y2
Phone: (250) 862-2225
Fax: (250) 862-3367
www.stantec.com

NO	REVISIONS	DRN	CHK	DATE
3	ISSUED FOR 100% REVIEW	AR	BA	2013.02.26
2	ISSUED FOR 90%	AR	BA	2013.01.30
1	ISSUED FOR REVIEW	AR	LL	2012.XX.XX

DRN	AR	2012.01.07
DES	BA	2012.01.07
CHK	XX	
APP	XX	

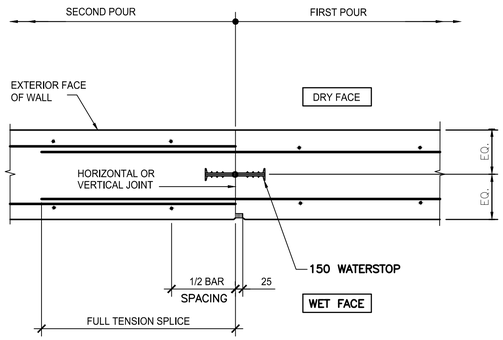

1 – CONSTRUCTION JOINT DETAIL AT WALL
N.T.S.

NOTES

1. PLACE CONCRETE FILL OVER THOROUGHLY CLEANED AND DEGREASED SURFACES.
2. CONTINUE JOINTS FROM UNDERLYING SLABS TO TOP OF FILL.
3. SAWCUT FILL AS NECESSARY TO PREVENT SIGNIFICANT CRACKING AS JUDGED & DIRECTED BY ENGINEER.

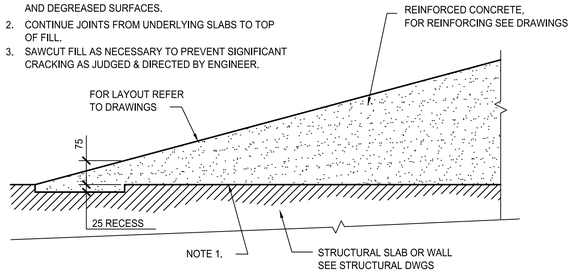

2 – CONCRETE BENCHING DETAIL
N.T.S.

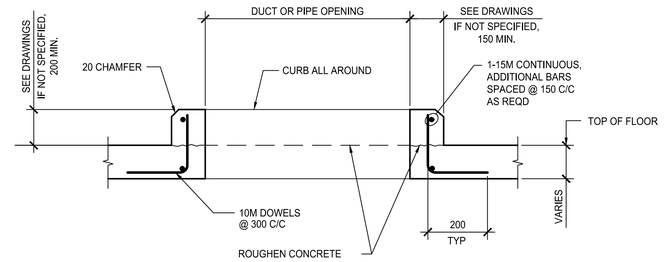

3 – TYP. CURB AROUND DUCT OR PIPE OPENINGS IN FLOOR SLABS
N.T.S.

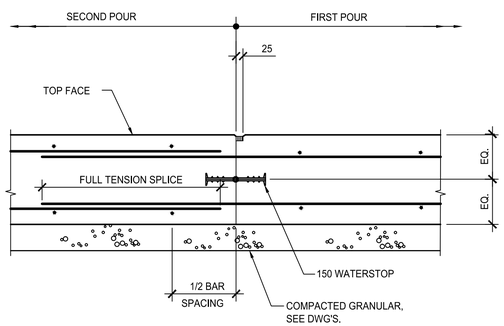

4 – CONSTRUCTION JOINT AT SLAB ON GRADE OR FOUNDATION SLAB
N.T.S.

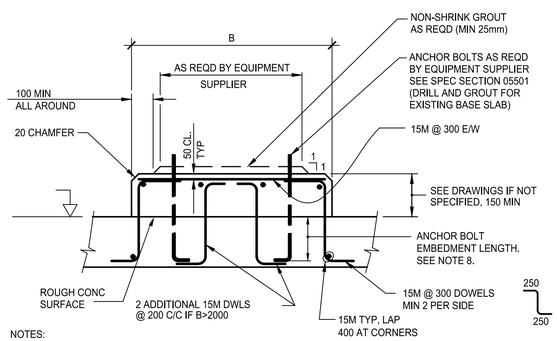

NOTES:

1. PAD SIZE SHALL BE MINIMUM INDICATED ON THE PLANS OR AS DETERMINED BY THE EQUIPMENT MANUFACTURER.
2. THE SIZE, NUMBER, TYPE, LOCATION, AND THREAD PROJECTION OF THE ANCHOR BOLTS IS TO BE DETERMINED BY THE EQUIPMENT MANUFACTURER.
3. ANCHOR BOLTS SHALL BE HELD IN POSITION WITH A TEMPLATE WHILE SLAB IS BEING POURED.
4. EQUIPMENT BASES SHALL BE INSTALLED LEVEL UNLESS SPECIFIED OTHERWISE.
5. SHIMS SHALL BE USED TO SUPPORT THE BASE WHILE THE NON-SHRINK GROUT IS PLACED. TEMPORARY LEVELING NUTS SHALL BE BACKED OFF. IF LEFT IN, SHIMS SHALL NOT BE EXPOSED TO VIEW.
6. SLAB REINFORCEMENT STEEL NOT SHOWN FOR CLARITY.
7. CLEAN AND ROUGHEN EXISTING FLOOR SURFACE PRIOR TO PLACING CONCRETE.
8. PAD DESIGN IS FOR EQUIPMENT ANCHORED INTO SLAB. CONTRACTOR IS TO SIZE AND LOCATE PAD REINFORCEMENT TO SUIT ANY ALTERNATIVE ANCHOR BOLT ARRANGEMENTS.

5 – TYP. HOUSEKEEPING PAD
N.T.S.

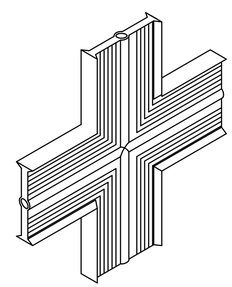

NOTES:

1. ALL WATERSTOPS TO BE ACCURATELY AND RIGIDLY SECURED IN PLACE
2. INTERNAL WATERSTOP IS REQUIRED IN ALL JOINTS OF WATER RETAINING STRUCTURES AND IN ALL JOINTS OF ALL BASE SLABS AND EXTERIOR WALLS BELOW GRADE.
3. ALL CROSSES, TEE'S, L'S AND OTHER SHAPED JOINTS (EXCEPT STRAIGHT BUTT JOINTS) SHALL BE PLANT FABRICATED BY THE WATERSTOP SUPPLIER.
4. APPROVED PRODUCTS GREENSTREAK PVC WATERSTOP TYPE 788.

JUNCTIONS (PRE-MANUFACTURED)

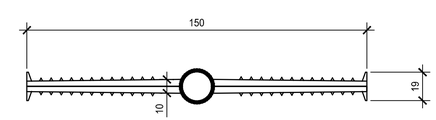

6 – TYP. WATERSTOP
N.T.S.

NO	REVISIONS	DRN	CHK	DATE
3	ISSUED FOR 100% REVIEW	AR	BA	2013.02.26
2	ISSUED FOR 90% REVIEW	AR	BA	2013.01.30
1	ISSUED FOR REVIEW	AR	LL	2012.XX.XX

DRN	AR	2012.01.07
DES	BA	2012.01.07
CHK	XX	
APP		

PREPARED BY

Stantec Consulting Ltd.
Suite 400
1620 Dickson Avenue
Kelowna, BC V1Y 9Y2
Phone: (250) 762-3225
Fax: (250) 861-3367
www.stantec.com
Stantec

PREPARED FOR

DISTRICT OF SUMMERLAND

DISTRICT OF SUMMERLAND
WASTEWATER TREATMENT FACILITY UPGRADE

GRIT REMOVAL PROCESS UPGRADE
DETAILS

DATE	2012.XX.XX
PROJECT NO	112180002
FILENAME	s_112180002.DWG
SHEET No.	
DRAWING NO	**S500**

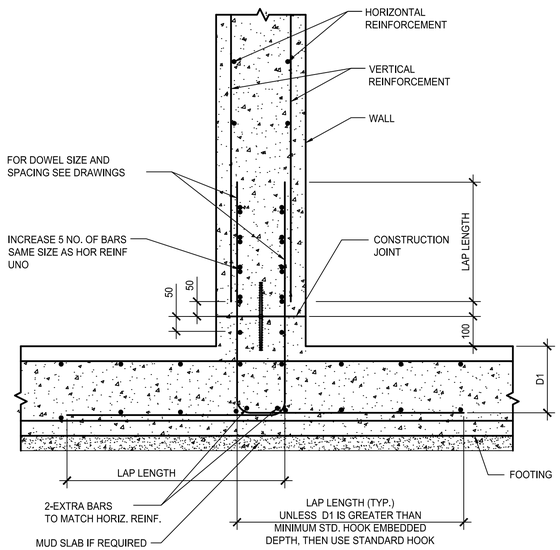

VERTICAL SECTION

1 – REINFORCING AT BASE SLAB TO INTERIOR WALL

N.T.S.

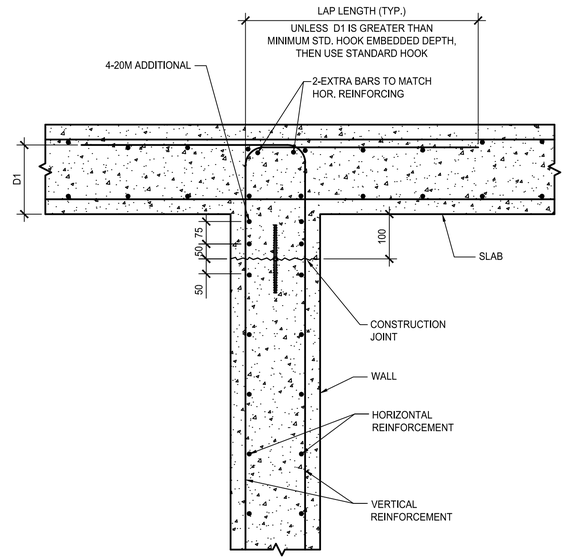

VERTICAL SECTION

2 – REINFORCING AT WALL TO SUSPENDED SLAB

N.T.S. (DRY AREAS)

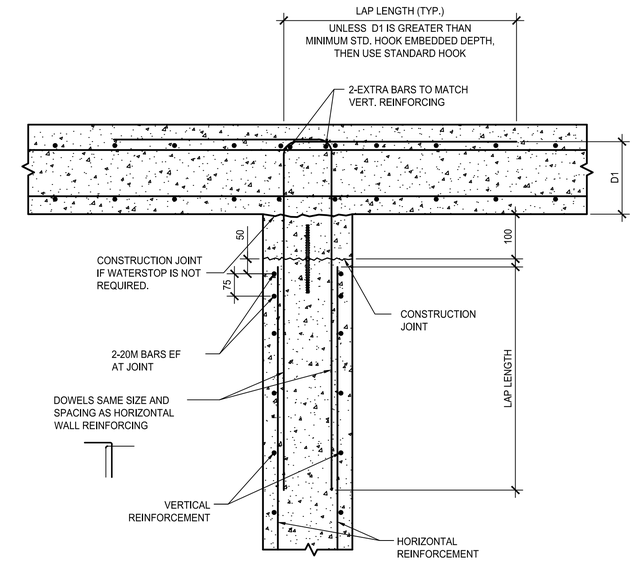

PLAN SECTION

NOTE:
WHERE CONSTRUCTION JOINT IS NOT REQUIRED, MAKE HORIZONTAL BAR CONTINUOUS. (NO SPLICE)

3 – REINFORCING AT WALL TO TO WALL INTERSECTIONS

N.T.S.

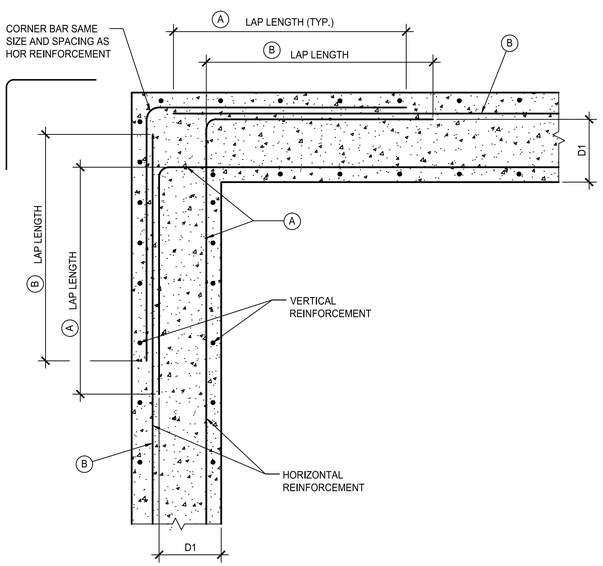

PLAN SECTION

4 – REINFORCING AT WALL TO TO WALL CORNERS

N.T.S. (DRY AREAS)

(A) LAP LENGTH (TYP.) UNLESS D1 IS GREATER THAN MINIMUM STD. HOOK EMBEDDED DEPTH, THEN USE STANDARD HOOK

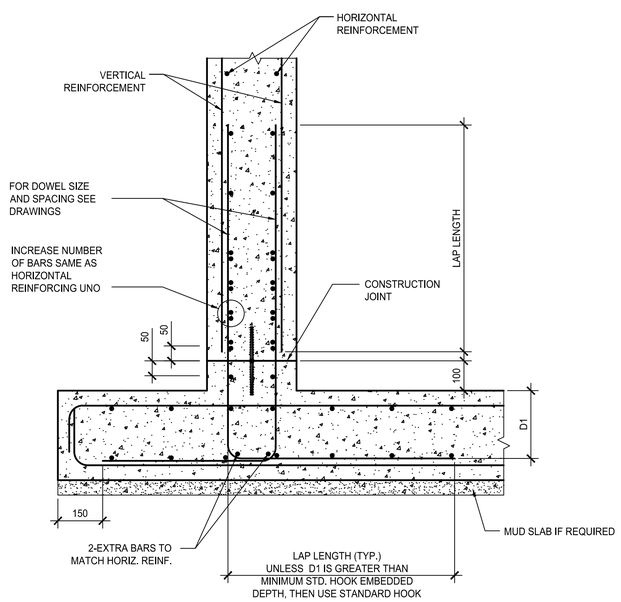

VERTICAL SECTION

4 – REINFORCING AT BASE TO EXTERIOR WALL

N.T.S. (DRY AREAS)

DATE	2012.XX.XX
PROJECT NO	112180002
FILENAME	s_112180002.DWG
SHEET No.	
DRAWING NO	S501

DISTRICT OF SUMMERLAND
WASTEWATER TREATMENT FACILITY UPGRADE

GRIT REMOVAL PROCESS UPGRADE DETAILS

PREPARED FOR

DISTRICT OF SUMMERLAND

PREPARED BY

Stantec Consulting Ltd.
Suite 400
1620 Dickson Avenue
Kelowna, BC V1Y 9Y2
Phone: 250 762-9325
Fax: 250 869-9387
www.stantec.com
Stantec

NO	REVISIONS	DRN	CHK	DATE
3	ISSUED FOR 100% REVIEW	AR	BA	2013.02.26
2	ISSUED FOR 90%	AR	BA	2013.01.30
1	ISSUED FOR REVIEW	AR	LL	2012.XX.XX
		DRN	CHK	DATE

DRN	AR	2012.01.07
DES	BA	2012.01.07
CHK	XX	
APP	XX	

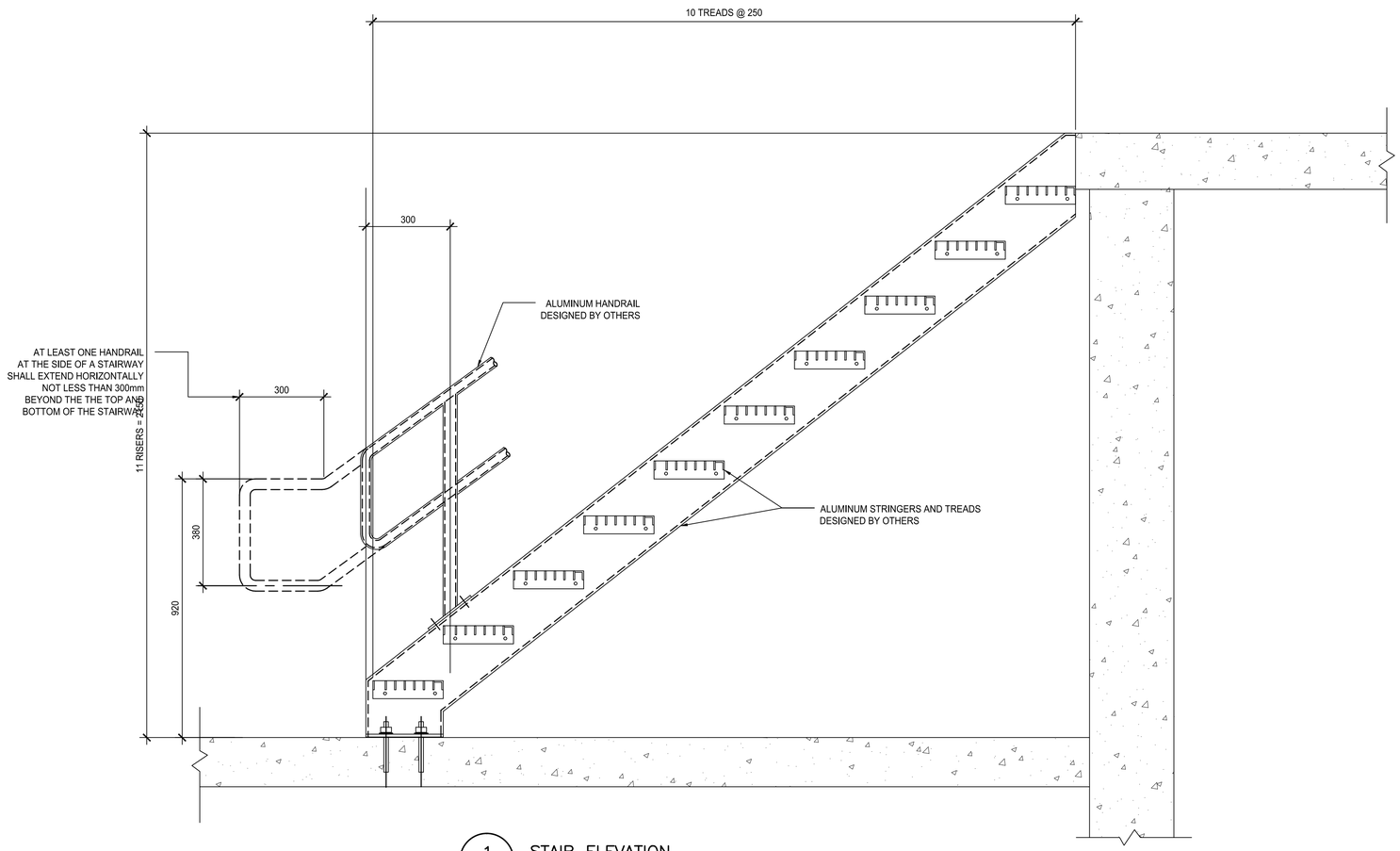

1 STAIR ELEVATION

N.T.S.

NOTE:
ALUMINUM STRINGERS, TREADS, LANDINGS AND HANDRAILS DESIGNED BY OTHERS TO CURRENT BUILDING CODES AND OH&S STANDARDS.

DATE	2012.XX.XX
PROJECT NO	112180002
FILENAME	s_112180002.DWG
SHEET No.	
DRAWING NO	S502

DISTRICT OF SUMMERLAND
WASTEWATER TREATMENT FACILITY UPGRADE

GRIT REMOVAL PROCESS UPGRADE
STAIR SECTION

PREPARED FOR

DISTRICT OF SUMMERLAND

PREPARED BY

Stantec Consulting Ltd.
Suite 400
1620 Dickson Avenue
Kelowna, BC V1Y 9Y2
Phone: (250) 860-2225
Fax: (250) 860-3387
www.stantec.com

Stantec

NO	REVISIONS	DRN	CHK	DATE
3	ISSUED FOR 100% REVIEW	AR	BA	2013.02.26
2	ISSUED FOR 90%	AR	BA	2013.01.30
1	ISSUED FOR REVIEW	AR	LL	2012.XX.XX

DRN	AR	2012.01.07
DES	BA	2012.01.07
CHK	XX	
APP	XX	

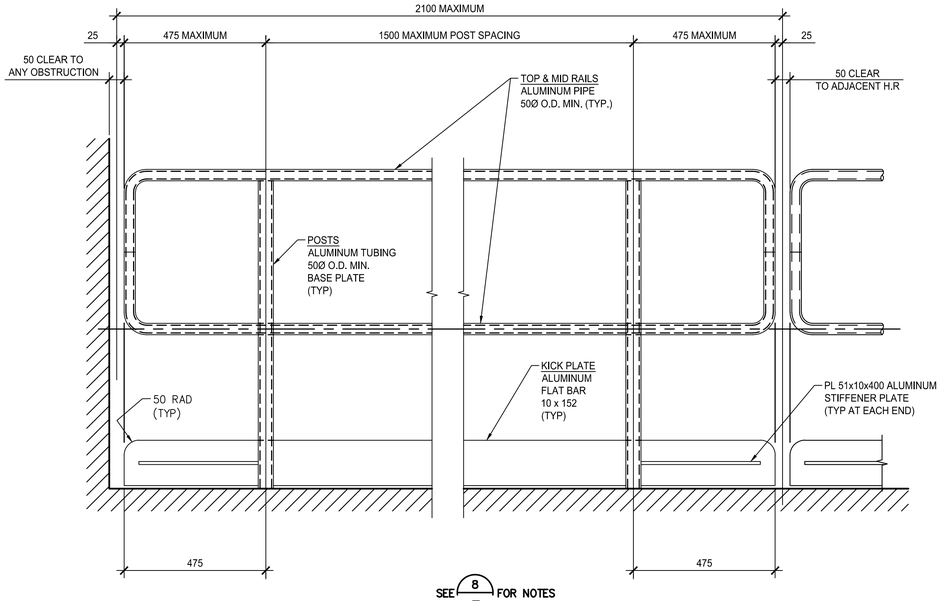

SEE 8 FOR NOTES

1 TYPICAL HANDRAIL CONSTRUCTION

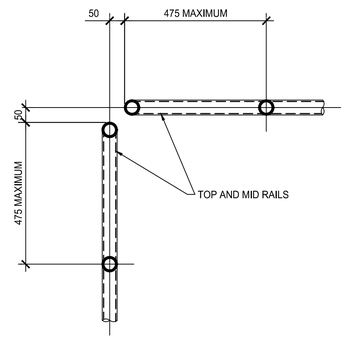

SEE 8 FOR NOTES

2 HANDRAIL CORNER DETAIL

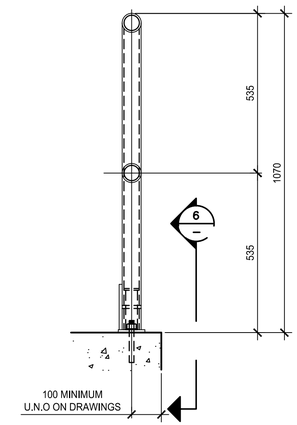

SEE 8 FOR NOTES

3 REMOVABLE HANDRAIL SECTION

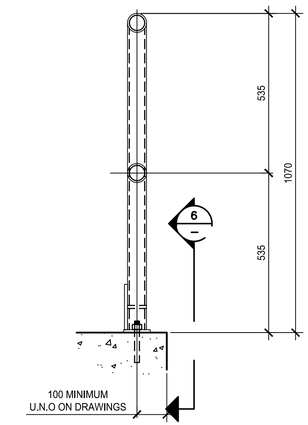

SEE 8 FOR NOTES

4 FIXED HANDRAIL DETAIL

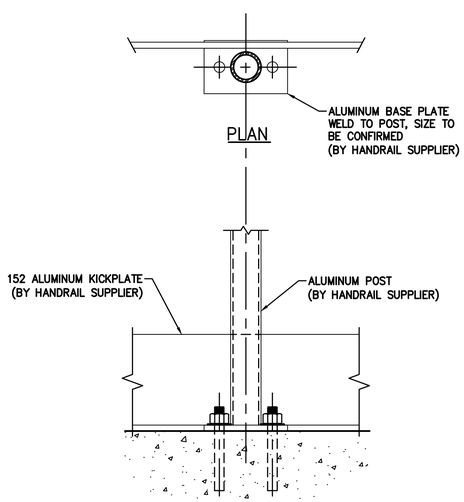

SEE 8 FOR NOTES

5 FIXED HANDRAIL TOP MOUNT BASE DETAILS TO CONCRETE

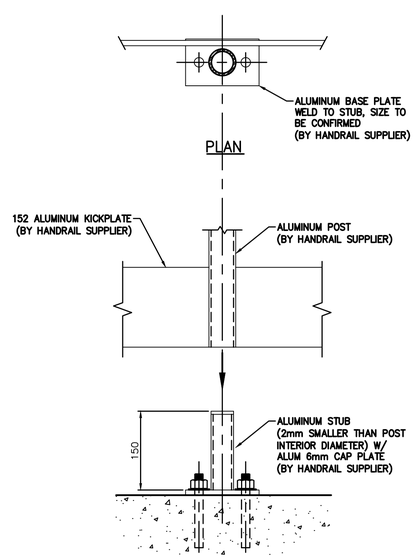

SEE 8 FOR NOTES

6 REMOVABLE HANDRAIL TOP MOUNT BASE DETAILS TO CONCRETE

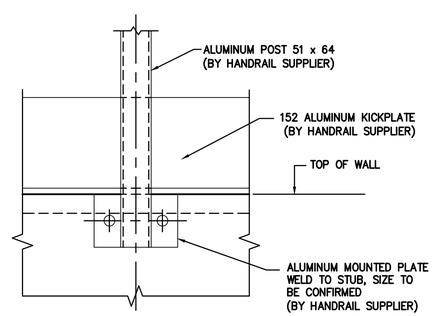

ELEVATION

SEE 8 FOR NOTES

7 HANDRAIL SIDE MOUNT BASE DETAIL TO CONCRETE

NOTES FOR ALUMINUM HANDRAILS

NOTES APPLY FOR STANDARD RAILING DETAIL 31 TO 41

1. ALUMINUM HANDRAIL POSTS AND RAILS TO BE SUPPLIED AS A COMPLETE SYSTEM INCLUDING ALL FITTINGS AND FASTENERS.
2. HANDRAIL, POST AND ANCHORAGE DETAILS SHOWN ARE FOR GUIDELINE PURPOSES ONLY AND SHALL BE DESIGNED BY THE CONTRACTOR'S ENGINEER. SUBMIT SHOP DRAWINGS FOR REVIEW PRIOR TO FABRICATION. SHOP DRAWINGS SHALL INCLUDE DESIGN LOADS, EXPANSION JOINNT LOCATIONS AND DETAILS AND ALL OTHER RELATED DETAILS. THE SHOP DRAWINGS SHALL BE SIGNED AND SEALED BY A QUALIFIED PROFESSIONAL ENGINEER REGISTERED IN THE PROVINCE OF B.C..
3. ALL MATERIAL TO BE ALUMINUM UNLESS OTHERWISE NOTED ON THE DRAWINGS.
4. HANDRAILS AND POSTS SHALL BE DESIGNED IN ACCORDANCE WITH THE LATEST OF B.C. BUILDING CODE WITH THE LOADS AS FOLLOWS:

   HORIZONTAL LOADS

   i) 1.0 kN POINT LOAD APPLIED AT ANY POINT FOR ALL HANDRAILS, OR

   ii) 0.75 kN/m APPLIED TO EACH HANDRAIL, WHICHEVER GOVERNS.

   VERTICAL LOADS

   i) 1.5 kN/m APPLIED ON TOP OF EACH HORIZONTAL RAILS VERTICAL LOADS ON HORIZONTAL RAILS NEED NOT BE CONSIDERED TO ACT SIMULTANEOUSLY WITH HORIZONTAL LOADS ON THAT HANDRAIL.
5. ALL ALUMINUM RAILING COMPONENTS TO BE CLEAR ANODIZED FINISH ON ALL EXPOSED SURFACES.
6. ALL BOLT FASTENERS TO BE 304 STAINLESS STEEL. ANCHORS TO CONCRETE SHALL BE ADHESIVE ANCHORS SEE DRAWINGS. DO NOT USE MECHANICAL ANCHORS.
7. RAILS TO BE MINIMUM 50mm O.D. TUBING. RAIL AND POST ACTUAL SIZES AND THICKNESSES TO BE DETERMINED BY THE CONTRACTOR'S ENGINEER, BUT THE OUTSIDE DIAMETER SHALL NOT BE LESS THAN 50mm.
8. POST SPACING 1500 mm MAX.
9. DRILL 8mm WEEPHOLES AT ALL LOW POINTS IN RAILS AND AT BASE OF POSTS WHERE NECESSARY.
10. EXPANSION JOINTS IN RAILS AT 6M CENTRES MAX. AND BETWEEN ANY TWO FIXED ENDS.
11. PAINT ALL ALUMINUM FACES IN CONTACT WITH CONCRETE OR DISSIMILAR METAL WITH TWO COATS OF ALKALI RESISTANT BITUMINOUS PAINT.
12. KICKPLATE TO BE SUPPLIED ON ALL HANDRAILS EXCEPT WHEN NOTED ON DRAWINGS OR WHEN HANDRAIL IS MOUNTED ON CONCRETE CURB 150mm OR HIGHER. REDUCE HANDRAIL HEIGHT ACCORDING TO CURB HEIGHT.

8 TYPICAL ALUMINUM HANDRAIL NOTES

DATE	2012.XX.XX
PROJECT NO	112180002
FILENAME	s_112180002.DWG
SHEET No.	
DRAWING NO	S503

DISTRICT OF SUMMERLAND
WASTEWATER TREATMENT FACILITY UPGRADE

GRIT REMOVAL PROCESS UPGRADE DETAILS

PREPARED FOR

DISTRICT OF SUMMERLAND

PREPARED BY

Stantec Consulting Ltd.
Suite 400
1620 Dickson Avenue
Kelowna, BC V1Y 9Y2
Phone: (250) 762-2225
Fax: (250) 861-3387
www.stantec.com

Stantec

NO	REVISIONS	DRN	CHK	DATE
3	ISSUED FOR 100% REVIEW	AR	BA	2013.02.26
2	ISSUED FOR 90%	AR	BA	2013.01.30
1	ISSUED FOR REVIEW	AR	LL	2012.XX.XX

DRN	AR	2012.01.07
DES	BA	2012.01.07
CHK	XX	
APP	XX	

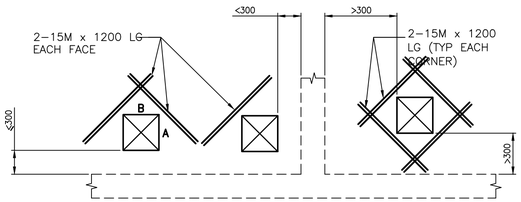

OPENING (A OR B) 150 TO < 300

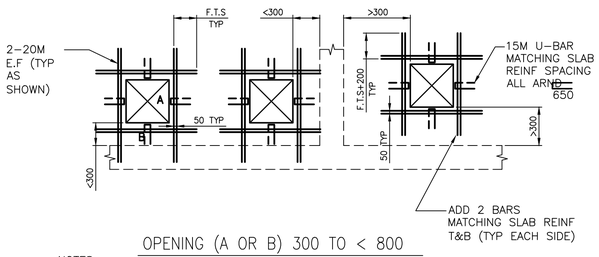

OPENING (A OR B) 300 TO < 800

NOTES:

1. AVOID CUTTING REINFORCEMENT AT OPENINGS BY SHIFTING REINF BARS TO THE SIDE. OBTAIN ENGINEER'S APPROVAL BEFORE CUTTING ANY REINFORCEMENT. OBTAIN ENGINEER'S APPROVAL WHEN THE NUMBER AND SIZE OF OPENINGS DIFFERS FROM THOSE SHOWN ON STRUCTURAL DRAWINGS.
2. REINF BARS TO BE KEPT 50 CLEAR OF OPNG.
3. CIRCULAR OPNGS TO BE TREATED IN SAME MANNER AS RECTANGULAR UNLESS OTHERWISE DETAILED.
4. PROVIDE STD HOOKS ON ADDL REINF WHERE IT IS NOT POSSIBLE TO INSTALL REINF WITH REQUIRED LENGTH.

1 – ADDITIONAL REINFORCING AROUND OPENING

N.T.S. (IN SLABS AND WALLS)

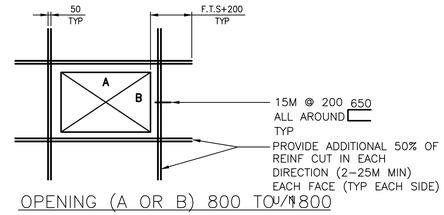

OPENING (A OR B) 800 TO < 1800

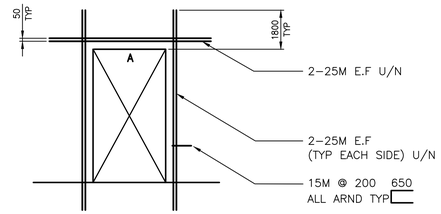

DOORWAY (A) < 1800

NOTES:

1. AVOID CUTTING REINFORCEMENT AT OPENINGS BY SHIFTING REINF BARS TO THE SIDE. OBTAIN ENGINEER'S APPROVAL BEFORE CUTTING ANY REINFORCEMENT. OBTAIN ENGINEER'S APPROVAL WHEN THE NUMBER AND SIZE OF OPENINGS DIFFERS FROM THOSE SHOWN ON STRUCTURAL DRAWINGS.
2. REINF BARS TO BE KEPT 50 CLEAR OF OPNG.
3. CIRCULAR OPNGS TO BE TREATED IN SAME MANNER AS RECTANGULAR UNLESS OTHERWISE DETAILED.
4. PROVIDE STD HOOKS ON ADDL REINF WHERE IT IS NOT POSSIBLE TO INSTALL REINF WITH REQUIRED LENGTH.

2 – ADDITIONAL REINFORCING AROUND OPENING

N.T.S. (IN WALLS)

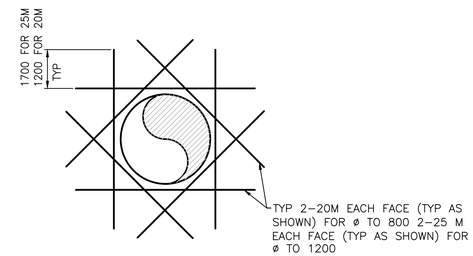

PIPE ø 300 TO 1200

NOTES:

1. AVOID CUTTING REINFORCEMENT AT OPENINGS BY SHIFTING REINF BARS TO THE SIDE. OBTAIN ENGINEER'S APPROVAL BEFORE CUTTING ANY REINFORCEMENT. OBTAIN ENGINEER'S APPROVAL WHEN THE NUMBER AND SIZE OF OPENINGS DIFFERS FROM THOSE SHOWN ON STRUCTURAL DRAWINGS.
2. REINF BARS TO BE KEPT 75 CLEAR OF OPNG.
3. PROVIDE STD HOOKS ON ADDL REINF WHERE IT IS NOT POSSIBLE TO INSTALL REINF WITH REQUIRED LENGTH.

3 – ADDITIONAL REINFORCING AROUND OPENING

N.T.S. (IN SLABS AND WALLS)

LAP SPLICE SCHEDULE FOR STRUCTURES		
BAR SIZE	FULL TENSION SPLICE	FULL TENSION SPLICE FOR TOP BARS *
	REGULAR BARS	REGULAR BARS
10M	390	510
15M	550	720
20M	670	870
25M	1080	1400
30M	1280	1670
35M	1530	1990

NOTES:

1. * TOP BARS ARE DEFINED AS HORIZONTAL REINFORCEMENT SO PLACED THAT MORE THAN 300 mm OF CONCRETE IS CAST IN THE MEMBER BELOW THE REINFORCEMENT.
2. APPLIES TO REINFORCING SPLICES NOT OTHERWISE DETAILED.

4 – REINFORCING SPLICES

MINIMUM STANDARD HOOKS AND EMBEDMENT DEPTH (FOR GRADE 400 REINF)						
BAR SIZE	10M	15M	20M	25M	30M	35M
90° HOOK LENGTH	180	260	310	400	510	640
180° HOOK LENGTH	140	180	210	280	390	550
CONC. FACE / EMBEDMENT LENGTH	206	292	356	460	546	652

fc' = 30 MPa
TYPICAL U/N ELSEWHERE ON DRAWINGS

5 – REINFORCING STANDARD HOOK DETAILS AND MIN. EMBEDMENT DEPTH IN CONCRETE

NO	REVISIONS	DRN	CHK	DATE
3	ISSUED FOR 100% REVIEW	AR	BA	2013.02.26
2	ISSUED FOR 90%	AR	BA	2013.01.30
1	ISSUED FOR REVIEW	AR	LL	2012.XX.XX

DRN	AR
DES	BA
CHK	XX
APP	XX

2012.01.07	
2012.01.07	

PREPARED BY

Stantec Consulting Ltd.
Suite 400
1620 Dickson Avenue
Kelowna, BC V1Y 9Y2
Phone (250) 860-9225
Fax (250) 860-3387
www.stantec.com
Stantec

PREPARED FOR

DISTRICT OF SUMMERLAND

DISTRICT OF SUMMERLAND WASTEWATER TREATMENT FACILITY UPGRADE

GRIT REMOVAL PROCESS UPGRADE DETAILS

DATE	2012.XX.XX
PROJECT NO	112180002
FILENAME	s_112180002.DWG
SHEET No.	
DRAWING NO	**S504**

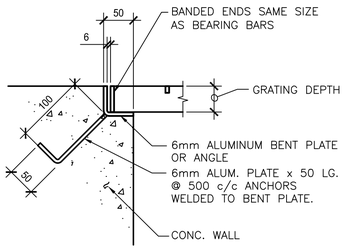

CAST–IN BENT PLATE SUPPORT

NOTES:

1. GRATING DESIGN FOR LIVE LOAD SEE PLANS AND STRUCTURAL NOTES
2. ALL PARTS SHALL BE ALUMINUM UNLESS NOTED OTHERWISE
3. PAINT ALL ALUMINUM SURFACES IN CONTACT WITH CONCRETE WITH TWO COATS OF ALKALI RESISTANT BITUMINOUS PAINT

1 – FRP GRATING WITH EMBEDDED FRAME

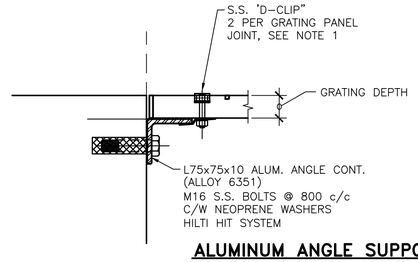

ALUMINUM ANGLE SUPPORT

NOTES:

1. ENSURE CLIPS AND BOLTS CANNOT FALL OFF WHEN GRATING IS REMOVED.
2. GRATING DESIGN FOR LIVE LOAD SEE PLANS AND STRUCTURAL NOTES
3. ALL PARTS SHALL BE ALUMINUM UNLESS NOTED OTHERWISE
4. PAINT ALL ALUMINUM SURFACES IN CONTACT WITH CONCRETE WITH TWO COATS OF ALKALI RESISTANT BITUMINOUS PAINT
5. OPENINGS IN GRATING TO BE BANDED WITH SAME SIZE OF PLATE USED FOR BEARING BARS AND GROUNG TO A SMOOTH FINISH. REFER TO MANUFACTURER'S SPEC. FOR MAX. OPENING SIZE.

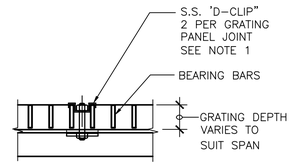

2 – FRP GRATING WITH BOLTED FRAME

DRN	AR	2012.01.07	3	ISSUED FOR 100% REVIEW	AR BA 2013.02.26
DES	BA	2012.01.07	2	ISSUED FOR 90%	AR BA 2013.01.30
CHK	XX		1	ISSUED FOR REVIEW	AR LL 2012.XX.XX
APP	XX		NO	REVISIONS	DRN CHK DATE

PREPARED BY

Stantec Consulting Ltd.
Suite 400
1620 Dickson Avenue
Kelowna, BC V1Y 9Y2
Phone: (250) 762-2225
Fax: (250) 861-3367
www.stantec.com

Stantec

PREPARED FOR

DISTRICT OF SUMMERLAND

DATE 2012.XX.XX
PROJECT NO 112180002
FILENAME s_112180002.DWG
SHEET No.
DRAWING NO S505

DISTRICT OF SUMMERLAND
WASTEWATER TREATMENT FACILITY UPGRADE

GRIT REMOVAL PROCESS UPGRADE DETAILS

EQUIPMENT SYMBOLS

- CYCLONE
- DIFFUSER HEADER
- GRIT CLASSIFIER
- MOTOR
- PUMP, CENTRIFUGAL
- SCREEN, BAR
- SCREEN, MANUAL
- SCREENING CONVEYOR

PIPE LINE DEVICES

- AIR GAP
- BLIND FLANGE
- CAP OR PLUG
- CONNECTION, PURGE OR FLUSHING
- CONNECTOR, QUICK
- DIFFUSER OR SPRAY NOZZLE
- DRAIN
- EXPANSION JOINT
- FLEXIBLE CONNECTION
- LEVEL
- ORIFACE PLATE
- PRESSURE SENSOR, IN-LINE
- REDUCER
- SAMPLER, AUTOMATIC
- SAMPLE POINT, MANUAL
- WEIR

GENERAL ABBREVIATIONS

B.O.P.	BOTTOM OF PUMP
C/L	CENTRE LINE
EL.	ELEVATION
HWL	HIGH WATER LEVEL
INV.	INVERT
LWL	LOW WATER LEVEL
MAX.	MAXIMUM
MIN.	MINIMUM
N.T.S.	NOT TO SCALE
T.O.C.	TOP OF CONCRETE

PROCESS LEGEND SHEET FOLLOWS ISA 5.1 (R1992) INSTRUMENTATION SYMBOLS AND IDENTIFICATION. ALL EQUIPMENT SHOWN ON THIS LEGEND SHEET ISN'T NECESSARILY USED FOR THIS PROJECT.

VALVE SYMBOLS

- 3 WAY VALVE
- 4 WAY VALVE
- ANGLE VALVE
- BACKFLOW PREVENTER
- BACK PRESSURE REGULATOR VALVE – EXTERNAL PRESSURE TAP
- BACK PRESSURE REGULATOR VALVE – SELF CONTAINED
- BALANCING DAMPER, CIRCULAR
- BALL VALVE, CLOSED
- BALL VALVE, OPEN
- BALL CHECK VALVE
- BUTTERFLY VALVE
- CHECK VALVE
- CHECK VALVE, DOUBLE LEAF
- CHECK VALVE, DUCKBILL
- DIAPHRAGM VALVE
- FLOAT VALVE
- FOOT VALVE
- GATE VALVE
- GLOBE VALVE
- KNIFE GATE VALVE
- MUD VALVE
- NEEDLE VALVE
- PINCH VALVE
- PLUG VALVE
- PRESSURE REDUCING REGULATOR VALVE – EXTERNAL PRESSURE TAP
- PRESSURE REDUCING REGULATOR VALVE – SELF CONTAINED
- PRESSURE AND VACUUM RELIEF VALVE
- RUPTURE DISC PRESSURE RELIEF VALVE
- RUPTURE DISC VACUUM RELIEF VALVE
- RUPTURE DISC VACUUM RELIEF VALVE
- TELESCOPIC VALVE
- VACUUM RELIEF VALVE

VALVE ACTUATORS/OPERATOR

- DIAPHRAGM (PRESSURE)
- DIAPHRAGM (SPRING)
- DIGITAL
- MOTOR
- PISTON
- SOLENOID

GATE SYMBOLS

- FLAP GATE
- LEVEL CONTROL GATE
- SLIDE GATE
- SLUICE GATE
- STOP LOG
- WEIR GATE

COMMODITY LIST

C1	POTABLE WATER (DOMESTIC)
C3	RECYCLED, NON-POTABLE WATER, SEAL WATER
CLS	CHLORINE SOLUTION
CHV	CHEMICAL VENT
DR	DRAINAGE
FA	FOUL AIR
FLBW	FILTER BACKWASH WATER
FLE	FILTER EFFLUENT
FLY	FILTER SCREEN
FO	FERMENTER OVERFLOW
FPS	FERMENTED PRIMARY SLUDGE
FSU	FERMENTER SUPERNATANT
FY	FERMENTER SCUM
GR	GRIT
IA	INSTRUMENT AIR
ML	MIXED LIQUOR
NG	NATURAL GAS
OF	OVERFLOW
PA	PROCESS AIR
PD	PROCESS DRAIN
PE	PRIMARY EFFLUENT
PS	PRIMARY SLUDGE
PY	PRIMARY SCUM
RAS	RETURN ACTIVATED SLUDGE
RS	RAW SEWAGE
SA	SERVICE AIR
SAN	SANITARY DRAINAGE
SC	SCREENINGS
SCP	SCREENINGS COMPACTOR PRESSATE
SE	SECONDARY EFFLUENT
STM	STORMWATER DRAINAGE
SW	SEAL WATER
SY	SECONDARY SCUM
V	VENT
WAS	WASTE ACTIVATED SLUDGE
Y	SCUM

PROCESS EQUIPMENT ABREVIATIONS

AER	AERATOR
ALC	AUTOMATIC LEVEL CONTROLLER
B	BLOWER
BC	BIOREACTOR CELL
BIN	
BRM	BARMINUTOR
CFR	CHEMICAL FEEDER (POLYMER PUMP, CHLORINATOR, ETC.)
CM	CLARIFIER MOTOR
COL	COLLECTOR OR CONTAINER
CON	CONVEYOR (BELT, BUCKET ELEVATOR, SCREW, ETC.)
COM	COMPRESSOR
CPT	COMPACTOR (SCREENINGS, ETC.)
CRN	CRANE OR HOIST
CTF	CENTRIFUGE
CYC	CYCLONE
FLC	FLOCCULATOR
FLG	FLAP GATE
FLT	FILTER
FM	FERMENTER MOTOR
FP	FILTER PRESS
FLU	PARSHALL FLUME
G	GATE (FLAP, SLUICE, SLIDE, FABRICATED)
GDR	GRINDER
MXR	MIXER
M	MOTOR
P	PUMP
PC	PRIMARY CLARIFIER
PRV	PRESSURE REDUCING VALVE
PSF	PRIMARY SLUDGE FERMENTER
SC	SECONDARY CLARIFIER
SCN	SCREEN (BAR, ROTARY, ETC.)
SCR	SCRUBBER
SL	STOP LOG
T	TANK
V	VALVE
VFD	VARIABLE SPEED DRIVE
VTX	VORTEX DEGRITTER
W	WEIR (CONTROL, MEASURING)
WW	WETWELL

PROCESS IDENTIFIERS

0	GENERAL SITE
1	PRIMARY TREATMENT
2	SECONDARY TREATMENT
3	SLUDGE MANAGEMENT
4	DISINFECTION

PIPE & CHANNEL IDENTIFICATION

A–200–PS–001

- SEQUENTIAL NUMBER
- COMMODITY
- NOMINAL DIAMETER (mm)
- PLANT AREA

PIPE SEQUENTIAL NUMBERS:

0–499	PROCESS
500–699	MECHANICAL
700–799	
800–899	
900–999	GENERAL SITE

1600x1600–SE–5410

- SEQUENTIAL NUMBER
- PLANT AREA/ PROCESS IDENTIFIER
- COMMODITY
- CHANNEL OR CHUTE SIZE (WIDTH x HEIGHT)

VALVE, GATE & WEIR IDENTIFICATION

PLANT AREA — PROCESS IDENTIFIER

C2–V–101A

V – VALVE
G – GATE
W – WEIR

NEAREST EQUIPMENT NUMBER IDENTIFIER

VP=PLUG VALVE
VG=GATE VALVE
VBA=BALL VALVE
VBF=BUTTERFLY VALVE
VK=KNIFE GATE VALVE
VC=CHECK VALVE

SG=SLIDE GATE
FG=FABRICATED GATE
FLG=FLAP GATE
ALC=AUTOMATIC LEVEL CONTROL

EQUIPMENT IDENTIFICATION

EQUIPMENT ABBREVIATION, ie. PUMP

P
G2–408A

EQUIPMENT IDENTIFIER

PLANT AREA — PROCESS IDENTIFIER

EQUIPMENT IDENTIFIER NUMBERS:

0–499	PROCESS EQUIPMENT
500–699	MECHANICAL EQUIPMENT
700–799	ELECTRICAL EQUIPMENT
800–899	INSTRUMENTATION EQUIPMENT
900–999	GENERAL SITE EQUIPMENT

NOTE:
1. ALL MOTORS, INSTRUMENTATION, VALVES ETC. ASSOCIATED WITH A PIECE OF EQUIPMENT WILL SHARE THE EQUIPMENT IDENTIFICATION NUMBER.

DATE	2012.01.24
PROJECT NO	112180002
FILENAME	P–001.DWG
SHEET No.	
DRAWING NO	P-001

DISTRICT OF SUMMERLAND
WASTEWATER TREATMENT FACILITY UPGRADE

GRIT REMOVAL PROCESS UPGRADE IDENTIFICATION, ABBREVIATION & SYMBOLS

PREPARED FOR

DISTRICT OF SUMMERLAND

PREPARED BY

Stantec Consulting Ltd.
Suite 400
1620 Dickson Avenue
Kelowna, BC V1Y 7X2
Phone: (250) 980-3225
Fax: (250) 860-3367
www.stantec.com

NO	REVISIONS	DRN	CHK	DATE
3	ISSUED FOR 100% REVIEW	CLS	JTK	2013.02.26
1	ISSUED FOR 90% REVIEW	CLS	JTK	2013.01.30
2	ISSUED FOR 60% REVIEW	CLS	MY	2012.12.20

DRN	CLS
DES	MY
CHK	MY
APP	MY

U:\active\112180002_summerland_wwtp\civil\drawing\sheet\Grit Removal Process Drawings\P-001.dwg
2/26/2013 1:39 PM

ORIGINAL SHEET – Oce D (22" x 34")

INSTRUMENT SYMBOLS

	CONTROL ROOM PANEL	FIELD MOUNTED	LOCAL PANEL
DISCRETE INSTRUMENTS			
SHARED DISPLAY SHARED CONTROL eg. DCS = DISTRIBUTED CONTROL SYSTEM			
COMPUTER FUNCTION			
PROGRAMMABLE LOGIC CONTROL (PLC) (RTU)			

FIELD MOUNTED INSTRUMENTS MAY BE POST OR WALL MOUNTED

STATUS LIGHT SHOW COLOUR INSIDE SYMBOL

I — SYSTEM LOGIC

R — MANUAL RESET

E — EMERGENCY SHUTDOWN LOGIC

P — PURGE OR FLUSHING DEVICE

DASHED LINE INDICATES INSTRUMENT LOCATION BEHIND THE PANEL (TYP)

ORIFICE PLATE C/W ORIFICE FLANGES

FI — FLOW INDICATOR ROTAMETER TYPE

TURBINE OR PROPELLER TYPE PRIMARY ELEMENT

ANNUBAR OR PITOT TUBE

MAGNETIC FLOW METER

VORTEX FLOW METER

U — ULTRASONIC FLOW METER

V — V-CONE DIFFERENTIAL

PTZ — PAN, TILT & ZOOM CAMERA

FIXED CAMERA

FIELDBUS INTERFACE INCLUDED IN MCC PACKAGE

INSTRUMENTS AND/OR CONTROLS INCLUDED IN EQUIPMENT PACKAGE

VCP — LOCAL CONTROL PANEL INCLUDED IN VENDOR PACKAGE

ACP — AREA CONTROL PANEL

DIGITAL INPUT

DIGITAL OUTPUT

ANALOG INPUT

ANALOG OUTPUT

PULSE INPUT

MODULATING DIGITAL OUTPUT

CONTROL VALVES

FO	DIAPHRAGM CONTROL VALVE FC = FAIL CLOSED FO = FAIL OPEN MOD = MODULATING VALVE
	HAND OPERATED CONTROL VALVE
E M	MOTOR A - AIR E - ELECTRIC H - HYDRAULIC E/H - ELECTROHYDRAULIC
	CYLINDER-ACTUATED Single-acting
	CYLINDER-ACTUATED Double-acting
	HYDR/PNEUMATIC PISTON OPERATED DIAPHRAGM OPERATOR w/HAND WHEEL
	THREE WAY DIAPHRAGM CONTROL VALVE
S	SOLENOID VALVE THREE WAY
S	SOLENOID VALVE FOUR WAY
FLOW	BACK PRESSURE REGULATOR, SELF-CONTAINED (BPV)
FLOW	PRESSURE REDUCING REGULATOR, SELF-CONTAINED (PCV)
	PRESSURE RELIEF/SAFETY VALVE (PSV)
	PRESSURE VACUUM RELIEF VALVE (PVSV)
	ANGLE/CHOKE VALVE

INSTRUMENT LINE SYMBOLS

ELECTRICAL SIGNAL

PNEUMATIC SIGNAL

CAPILLARY TUBING

HYDRAULIC SIGNAL

CONTROL SYSTEM DATA LINK DEVICENET OR ETHERNET AS NOTED

ELECTROMAGNETIC OR SONIC SIGNAL (GUIDED AND NON GUIDED)

INTERLOCK

NOTES:

1. FINAL INTERCONNECTION IS SUBJECT TO PRE-PACKAGED PROCESS EQUIPMENT VENDOR. CONTRACTOR TO PROVIDE ALL POWER, CONTROLS AND SIGNALS REQUIRED TO MEET THE REQUIREMENTS.
2. PANEL MOUNTED EQUIPMENT SHOWN FOR FUTURE FIELD DEVICES SHALL BE PROVIDED.

RELAY FUNCTION DESIGNATORS

Σ	ADD	>	HIGH SELECT
Δ	SUBTRACT	<	LOW SELECT
±	BIAS	A/D	ANALOG TO DIGITAL
%	GAIN OR ATTENUATE	REV	REVERSE
√	EXTRACT SQ ROOT	E/P	POTENTIAL TO PNEUMATIC
÷	DIVIDE	I/P	CURRENT TO PNEUMATIC
×	MULTIPLY	E/I	POTENTIAL TO CURRENT
1:1	BOOST		

IDENTIFICATION LETTERS

	FIRST-LETTER		SUCCEEDING-LETTERS		
	MEASURED OR INITIATING VARIABLE	MODIFIER	READOUT OR PASSIVE FUNCTION	OUTPUT FUNCTION	MODIFIER
A	ANALYSIS		ALARM		
B	BURNER, COMBUSTION		USER'S CHOICE	USER'S CHOICE	USER'S CHOICE
C	CIRCUIT			CONTROL	CLOSED
D	DISCONNECT	DIFFERENTIAL			
E	VOLTAGE / EMERGENCY		SENSOR (PRIMARY ELEMENT)		
F	FLOW RATE	RATIO (FRACTION)			
G	GENERAL / COMMENT		GLASS, VIEWING DEVICE		
H	HAND OPERATED				HIGH
I	CURRENT (ELECTRICAL)		INDICATE		
J	POWER	SCAN			
K	TIME, TIME SCHEDULE	TIME RATE OF CHANGE		CONTROL STATION	
L	LEVEL		LIGHT		LOW
M	USER'S CHOICE	MOMENTARY			MIDDLE, INTERMEDIATE
N	USER'S CHOICE		USER'S CHOICE	USER'S CHOICE	USER'S CHOICE
O	ON / OFF		ORIFICE, RESTRICTION		OPEN
P	PRESSURE, VACUUM		POINT (TEST) CONNECTION		
Q	QUANTITY, STATE	INTEGRATE, TOTALIZE			
R	RADIATION		RECORD		
S	SPEED, FREQUENCY	SAFETY	STATUS	SWITCH	
T	TEMPERATURE			TRANSMIT	
U	MULTIVARIABLE		MULTIFUNCTION	MULTIFUNCTION	MULTIFUNCTION
V	VIBRATION, MECHANICAL ANALYSIS			VALVE, DAMPER, LOUVER	
W	WEIGHT, FORCE		WELL		
X	UNCLASSIFIED	X AXIS	UNCLASSIFIED	UNCLASSIFIED	UNCLASSIFIED
Y	EVENT OR PRESENCE	Y AXIS		RELAY, COMPUTE, CONVERT	
Z	POSITION, DIMENSION	Z AXIS		DRIVER, ACTUATOR, UNCLASSIFIED FINAL CONTROL ELEMENT	

INSTRUMENT SUBSCRIPT ABBREVIATIONS

ABBR.	DESCRIPTION	ABBR.	DESCRIPTION
ACK	ACKNOWLEDGE	I/P	CURRENT TO PNEUMATIC
ACP	AREA CONTROL PANEL	LCP	LOCAL CONTROL PANEL
A/S	AIR SUPPLY	LEL	LOWER EXPLOSIVE LIMIT
BRG	BEARING	LOR	LOCAL/OFF/REMOTE
CT	CURRENT TRANSFORMER	M/A	MANUAL/AUTO
CL2	CHLORINE	O2	OXYGEN
COMB	COMBUSTIBLE	OBD	OUTBOARD
DIFF	DIFFERENTIAL	O/C	OPEN/CLOSE
DISCH	DISCHARGE	O/L	OVERLOAD
DO	DISSOLVED OXYGEN	O/O	ON/OFF
D/P	DIFFERENTIAL PRESSURE	ORP	OXYGEN REDUCTION POTENTIAL
ESO	EMERGENCY SHUTDOWN	PAR	PROCESS ALARM RELAY
ETM	ELAPSED TIME METER	PLC	PROGRAMMABLE LOGIC CONTROL
FC	FAIL CLOSED	RESET	RESET
FO	FAIL OPEN	RIO	REMOTE INPUT/OUTPUT
H	HIGH	SO2	SULPHUR DIOXIDE
HH	HIGH HIGH	SP	SET POINT
HMI	HUMAN MACHINE INTERFACE	SW	SELECTOR SWITCH
HOA	HAND/OFF/AUTO	S/S	STOP/START
HORN	ANNUNCIATOR HORN	TURB	TURBIDITY
HOR	HAND/OFF/REMOTE	UPS	UNINTERRUPTIBLE POWER SUPPLY
H2S	HYDROGEN SULPHIDE	VCP	VENDOR CONTROL PANEL
IBD	INBOARD	VIB	VIBRATION
I/I	CURRENT/CURRENT ISOLATION	WDG	WINDING

DATE 2012.01.24
PROJECT NO 112180002
FILENAME P-002.DWG
SHEET No.
DRAWING NO P-002

DISTRICT OF SUMMERLAND
WASTEWATER TREATMENT FACILITY UPGRADE

GRIT REMOVAL PROCESS UPGRADE
INSTRUMENTATION LEGEND & SYMBOLS

PREPARED FOR

PREPARED BY
Stantec Consulting Ltd.
Suite 400
1620 Dickson Avenue
Kelowna, BC V1Y 0P7
Phone: (250) 860-3225
Fax: (250) 860-3367
www.stantec.com

NO	REVISIONS	DRN	CHK	DATE
3	ISSUED FOR 100% REVIEW	CLS	JTK	2013.02.26
1	ISSUED FOR 90% REVIEW	CLS	JTK	2013.01.30
2	ISSUED FOR 60% REVIEW	CLS	MY	2012.12.20

DRN	CLS	2012.07.27
DES	MY	2012.01.24
CHK	MY	
APP	MY	

U:\active\112180002__summerland__wwtp\civil\drawing\sheet\Grit Removal Process Drawings\P-002.dwg
2/26/2013 1:40 PM

ORIGINAL SHEET - Oce D (22" x 34")

GENERAL NOTES

1. ALL CONCRETE TANKS AND CHANNELS, INTERCONNECTING PIPING AND SELECTED VALVES ARE SUPPLIED AND INSTALLED UNDER THIS CONTRACT.
2. ALL INTERCONNECTING WIRING BETWEEN EQUIPMENT AND CONTROL PANELS ARE SUPPLIED AND INSTALLED UNDER THIS CONTRACT.
3. REFER TO OWNER SUPPLIED CLOTH MEDIA DISK FILTER SUBMITTAL DOCUMENTATION FOR ALL SUPPLIED EQUIPMENT, VALVES, INSTRUMENTATION DEVICES AND PANELS TO BE INSTALLED UNDER THIS CONTRACT
4. ALL PIPE WALL PENETRATIONS ARE SUPPLIED AND INSTALLED UNDER THIS CONTRACT.

GRIT VORTEX REMOVAL CHAMBER

EQUIP. NO.: VTX–1050
SPEC: 11379
DIAMETER: 2500mm
CAPACITY: 10,000 m3/d (PEAK)
POWER: 2 hp

PADDLES MOTOR

EQUIP. NO.: VTX–1050
SPEC:
TYPE:
CAPACITY:
HEAD:
POWER: 3.0 Hp
CLASS. CLASS 1, DIV. II, GROUP D

MECHANICAL FINE SCREEN

EQUIP. NO.: SCN–1020
SPEC:
TYPE:
CAPACITY:
HEAD:
POWER: 0.5 Hp
CLASS. CLASS 1, DIV. II, GROUP D

MECHANICAL BRUSH MOTOR

EQUIP. NO.: BSN–1025
SPEC:
TYPE:
CAPACITY:
HEAD:
POWER: 1.0 Hp
CLASS. CLASS 1, DIV. II, GROUP D

SCREENING COMPACTOR

EQUIP. NO.: CMP–1010
SPEC:
TYPE:
CAPACITY:
HEAD:
POWER: 2.0 Hp
CLASS. CLASS 1, DIV. II, GROUP D

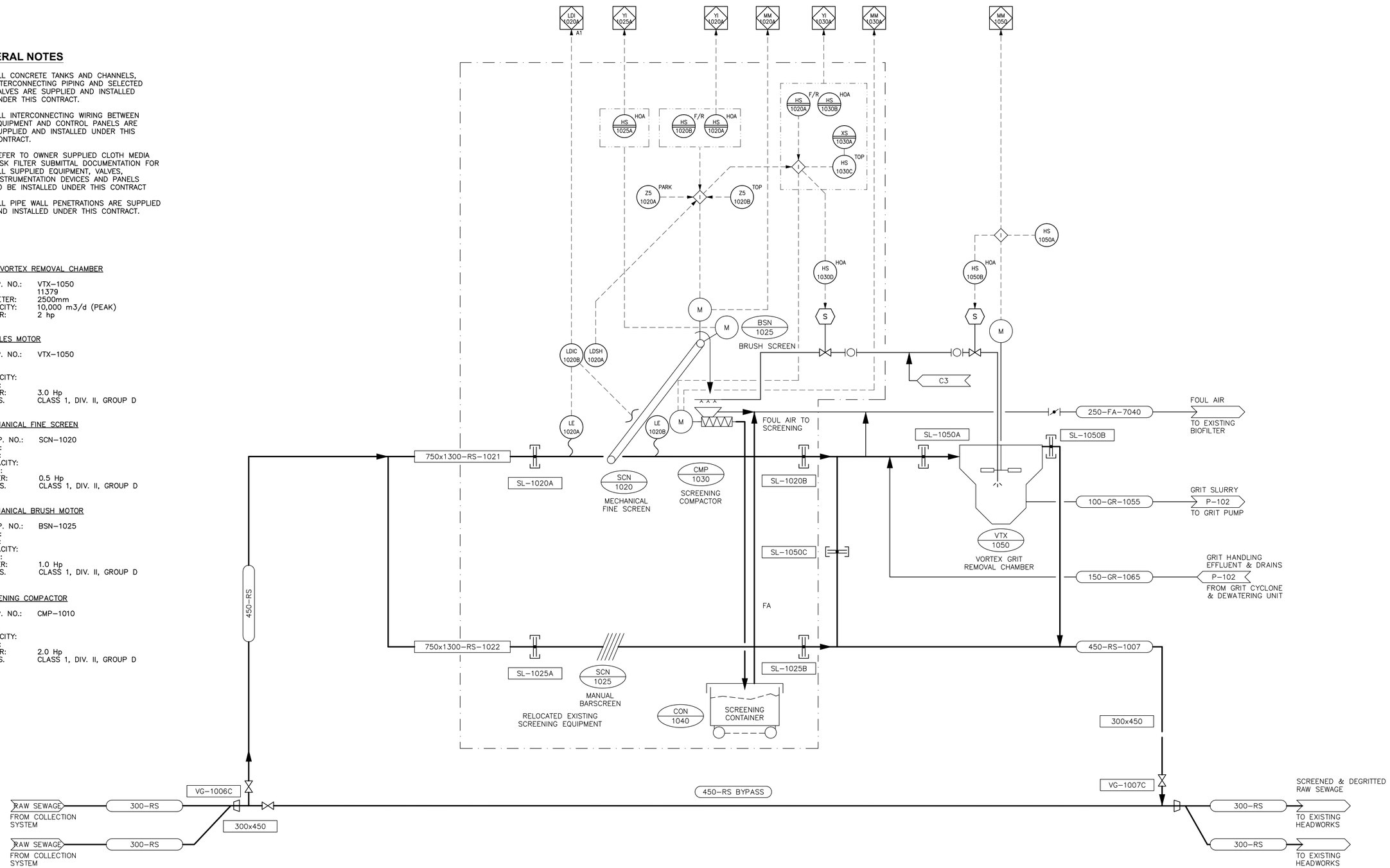

NO	REVISIONS	DRN	CHK	DATE
3	ISSUED FOR 100% REVIEW	CLS	JTK	2013.02.26
1	ISSUED FOR 90% REVIEW	CLS	JTK	2013.01.30
2	ISSUED FOR 60% REVIEW	CLS	MY	2012.12.20

DRN	CLS	2012.07.27
DES	MY	2012.01.24
CHK	MY	
APP	MY	

PREPARED BY

Stantec Consulting Ltd.
Suite 400
1620 Dickson Avenue
Kelowna, BC V1Y 7X9
Phone: (250) 860-3225
Fax: (250) 860-3387
www.stantec.com
Stantec

PREPARED FOR

DISTRICT OF SUMMERLAND
EASTERN GATEWAY, CANADA

DISTRICT OF SUMMERLAND
WASTEWATER TREATMENT FACILITY UPGRADE

GRIT REMOVAL PROCESS UPGRADE
PROCESS & INSTRUMENTATION DIAGRAM
SCREEN & GRIT CHAMBER

DATE	2012.01.24
PROJECT NO	112180002
FILENAME	P–101.DWG
SHEET No.	
DRAWING NO	P-101

U:\active\112180002_summerland_wwtp\civil\drawing\sheet\Grit Removal Process Drawings\P–101.dwg
2/26/2013 1:41 PM

ORIGINAL SHEET – Oce D (22" x 34")

GENERAL NOTES

1. ALL CONCRETE TANKS AND CHANNELS, INTERCONNECTING PIPING AND SELECTED VALVES ARE SUPPLIED AND INSTALLED UNDER THIS CONTRACT.
2. ALL INTERCONNECTING WIRING BETWEEN EQUIPMENT AND CONTROL PANELS ARE SUPPLIED AND INSTALLED UNDER THIS CONTRACT.
3. REFER TO OWNER SUPPLIED CLOTH MEDIA DISK FILTER SUBMITTAL DOCUMENTATION FOR ALL SUPPLIED EQUIPMENT, VALVES, INSTRUMENTATION DEVICES AND PANELS TO BE INSTALLED UNDER THIS CONTRACT
4. ALL PIPE WALL PENETRATIONS ARE SUPPLIED AND INSTALLED UNDER THIS CONTRACT.

GRIT PUMP

EQUIP. NO.: P–1055; P–1056 (SPARE)
SPEC: 11320
TYPE: CENTRIFUGAL, RECESSED IMPELLER
CAPACITY: 11.0 L/s
HEAD: 10.7 m
POWER: 7.5 Hp (5.6 kW)
CLASS: CLASS 1, DIV II, GROUP D

GRIT CYCLONE

EQUIP. NO.: CYC–1060
SPEC: 11380
CAPACITY: 12.0 L/s

GRIT DEWATERING UNIT

EQUIP. NO.: GD–1065
SPEC: 11380
CAPACITY: 11.0 L/s
POWER: 1.0 Hp (0.75 kW)
CLASS. CLASS 1, DIV. II, GROUP D

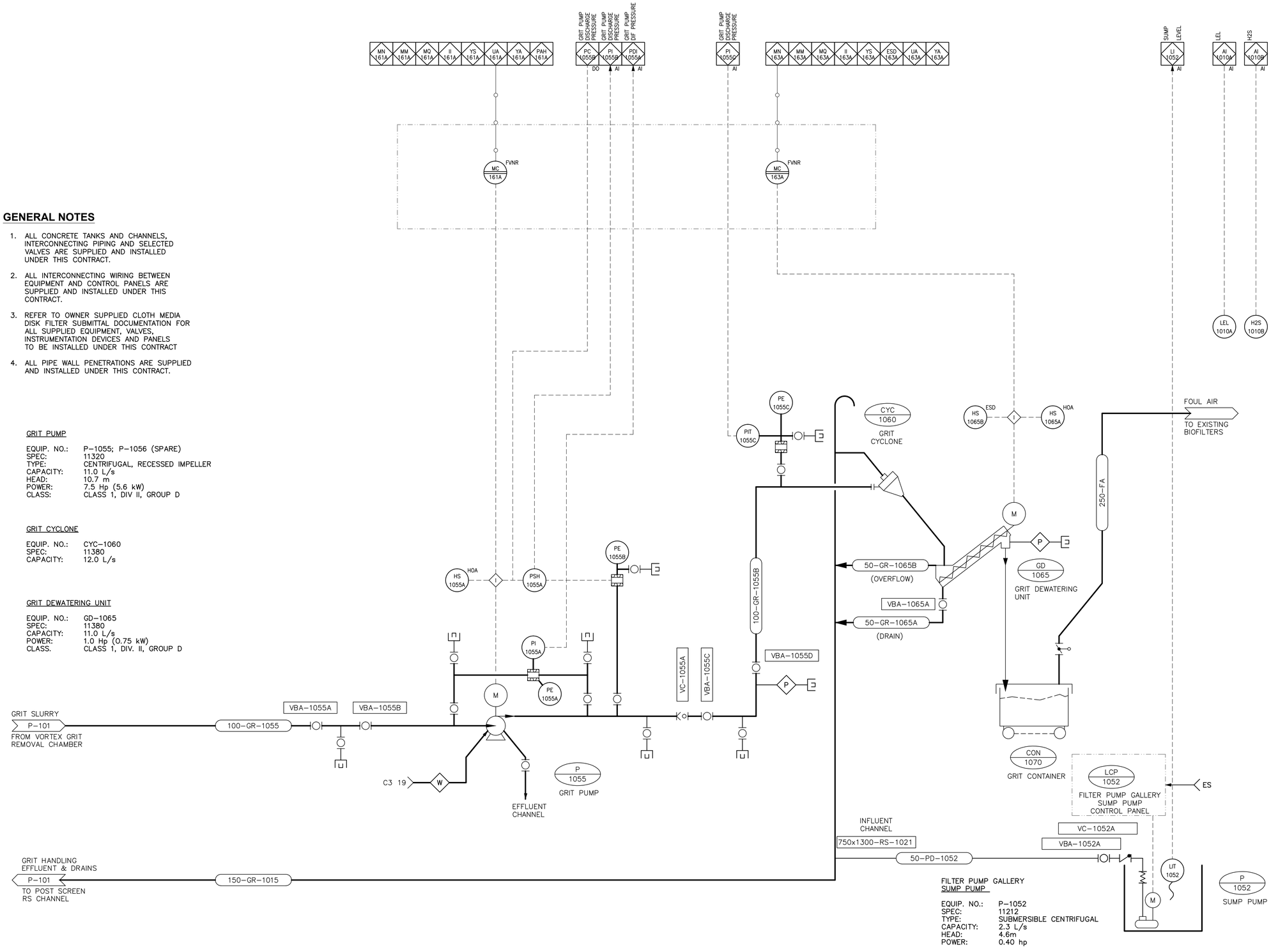

FILTER PUMP GALLERY
SUMP PUMP

EQUIP. NO.: P–1052
SPEC: 11212
TYPE: SUBMERSIBLE CENTRIFUGAL
CAPACITY: 2.3 L/s
HEAD: 4.6m
POWER: 0.40 hp

DATE	2012.01.24
PROJECT NO	112180002
FILENAME	P–102.DWG
SHEET No.	
DRAWING NO	P-102

DISTRICT OF SUMMERLAND
WASTEWATER TREATMENT FACILITY UPGRADE

GRIT REMOVAL PROCESS UPGRADE
PROCESS & INSTRUMENTATION DIAGRAM
GRIT PUMP, CYCLONE & DEWATERING

PREPARED FOR

DISTRICT OF SUMMERLAND

PREPARED BY

Stantec Consulting Ltd.
Suite 400
1620 Dickson Avenue
Kelowna, BC V1Y 9Y2
Phone: (250) 860-3225
Fax: (250) 860-3367
www.stantec.com
Stantec

REVISIONS				
NO	DRN	CHK	DATE	
3	CLS	JTK	2013.02.26	ISSUED FOR 100% REVIEW
1	CLS	JTK	2013.01.30	ISSUED FOR 90% REVIEW
2	CLS	MY	2012.12.20	ISSUED FOR 60% REVIEW

DRN	CLS	2012.07.27
DES	MY	2012.01.24
CHK	MY	
APP	MY	

U:\active\112180002_summerland_wwtp\civil\drawing\sheet\Grit Removal Process Drawings\P-102.dwg
2/26/2013 1:42 PM

ORIGINAL SHEET – Oce D (22" x 34")

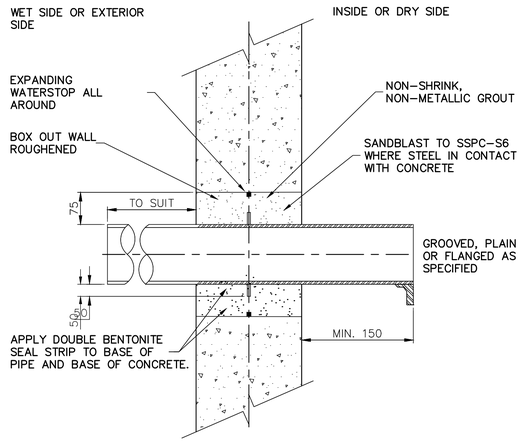

APPLICATION NOTES:

1. CONCRETE WALL
2. STEEL OR STAINLESS STEEL PIPE.
3. CONDITION
   a) WET TO DRY
   b) WET TO WET
   c) INTERIOR TO EXTERIOR
4. NO TRANSVERSE MOVEMENT ALLOWED
5. LIQUID SIDE MUST PASS LEAKAGE TEST TO WHICH STRUCTURE IS SUBJECTED.
6. SAME DETAIL FOR VERTICAL OR HORIZONTAL WALL.
7. PIPE MAY BE CAST IN PLACE WITHIN THE FORMWORK, WITH APPROVAL FROM THE ENGINEER.

STD 101 — TYPE 1 WALL PENETRATION

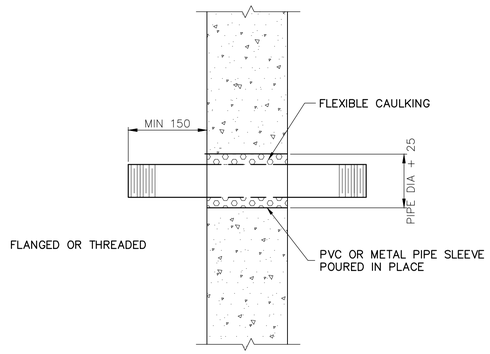

APPLICATION NOTES:

1. CONCRETE WALL
2. STEEL, DUCTILE IRON, PVC OR FRP PIPE; LESS THAN 75mm NOMINAL I.D.
3. CONDITION
   a) DRY TO DRY
4. ALLOW TRANSVERSE MOVEMENT

STD 103 — TYPE 3 WALL PENETRATION

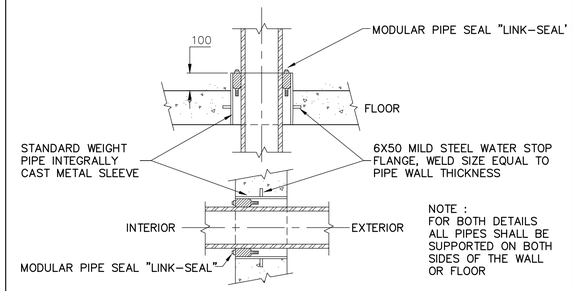

TABLE OF "LINK-SEAL" SERIES FOR STEEL PIPE
(FOR OTHER SIZES SEE SUPPLIER'S TABLES)

STEEL PIPE		WALL SLEEVE	LINK-SEAL		STEEL PIPE		WALL SLEEVE	LINK-SEAL	
SIZE	ACTUAL O.D.mm	I.D.mm	LINKS/ SEAL	MODEL NO.	SIZE	ACTUAL O.D.mm	I.D.mm	LINKS/ SEAL	MODEL NO.
13	21.3	52.5	4	LS-200-C	250	273.1	336.6	10	LS-425-C
20	26.7	62.7	5	LS-275-C	300	323.9	387.4	12	LS-425-C
25	33.4	62.7	5	LS-200-C	350	355.6	438.2	13	LS-400-C
32	42.2	77.9	7	LS-275-C	400	406.4	489.0	15	LS-400-C
38	48.3	90.1	5	LS-300-C	450	457.2	590.6	16	LS-500-C
50	60.3	102.3	6	LS-300-C	500	508.0	590.6	18	LS-400-C
75	89.0	128.2	8	LS-300-C	600	609.6	743.0	21	LS-500-C
100	114.3	154.1	10	LS-300-C	750	762.0	895.0	26	LS-500-C
125	141.3	202.7	6	LS-425-C	900	914.4	1048.0	30	LS-500-C
150	168.3	254.5	7	LS-400-C	1050	1066.8	1200.0	36	LS-500-C
200	219.1	304.8	12	LS-475-C	1200	1219.2	1353.0	41	LS-500-C

APPLICATION NOTES

1. CONCRETE WALL
2. STEEL, STAINLESS STEEL, DUCTILE IRON, PVC OR FRP PIPE; NON-INSULATED.
3. CONDITION
   a) DRY TO DRY
   b) INTERIOR TO UNDERGROUND
4. STEEL PIPE SLEEVE NOT APPLICABLE FOR CORED PENETRATIONS

STD 105 — TYPE 5 – SINGLE LINK-SEAL WALL PENETRATION

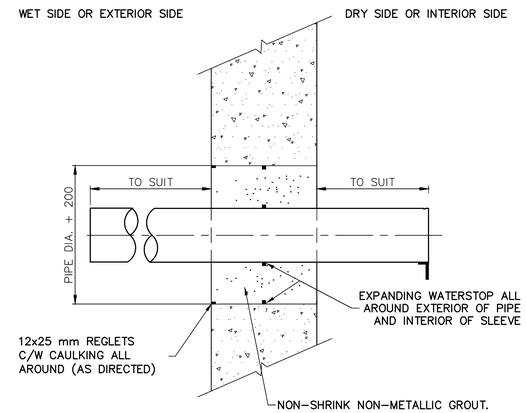

APPLICATION NOTES:

1. CONCRETE WALL
2. DUCTILE IRON, PVC, HDPE PIPE
3. CONDITION
   a) WET TO DRY
   b) WET TO WET
   c) INTERIOR TO EXTERIOR
4. NO TRANSVERSE MOVEMENT ALLOWED
5. LIQUID SIDE MUST PASS LEAKAGE TEST TO WHICH STRUCTURE IS SUBJECTED.
6. SAME DETAIL FOR VERTICAL OR HORIZONTAL WALL.

STD 114 — TYPE 9 WALL PENETRATION

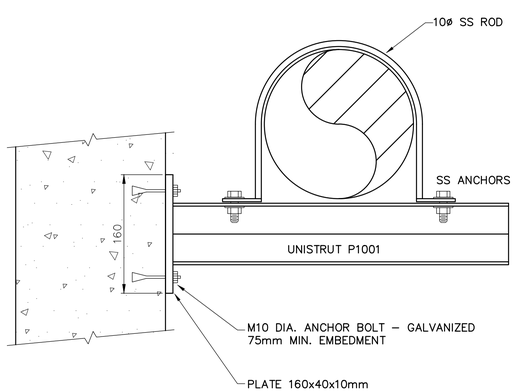

MAXIMUM LOAD OF BEAM LOADED @ CENTER (kg)	LENGTH OF SUPPORT L (mm)
440	760
740	450
1120	300

STD 201 — TYPE 1 WALL MOUNTED PIPE SUPPORT

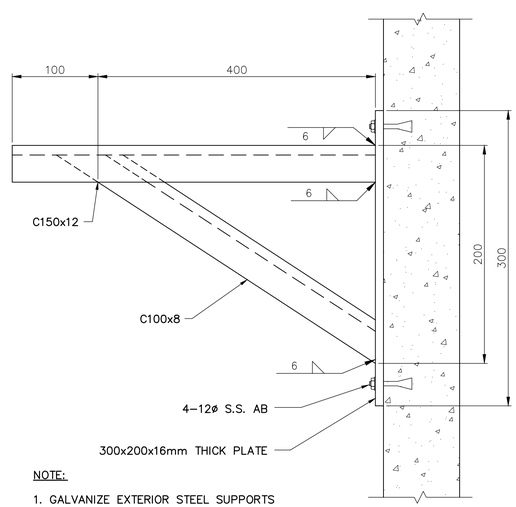

NOTE:

1. GALVANIZE EXTERIOR STEEL SUPPORTS

STD 202 — TYPE 2 WALL MOUNTED PIPE SUPPORT

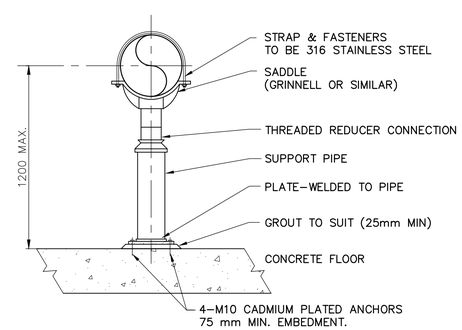

PIPE SIZE (mm)	SUPPORT PIPE (mm)	PLATE SIZE (mm)
50	38	150 X 150 X 9.5
75	50	250 X 250 X 9.5
100	75	250 X 250 X 9.5
150	100	250 X 250 X 9.5
200	150	250 X 250 X 9.5
250	200	300 X 300 X 9.5

STD 213 — ADJUSTABLE PIPE SUPPORT

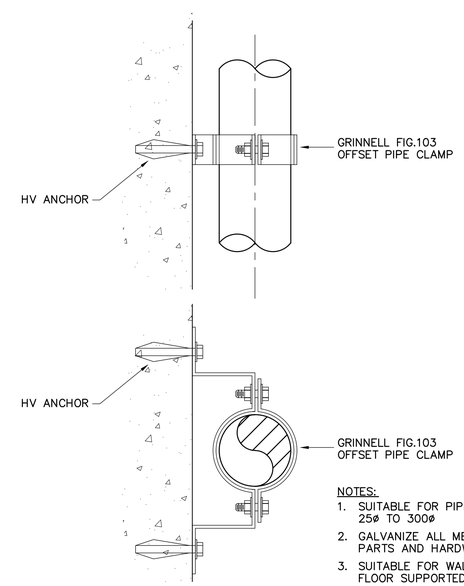

NOTES:

1. SUITABLE FOR PIPES 25ø TO 300ø
2. GALVANIZE ALL METAL PARTS AND HARDWARE
3. SUITABLE FOR WALL OR FLOOR SUPPORTED PIPE

STD 215 — OFFSET PIPE SUPPORT

DISTRICT OF SUMMERLAND
WASTEWATER TREATMENT FACILITY UPGRADE

GRIT REMOVAL PROCESS UPGRADE
STANDARD DETAILS
SHEET 1

DATE	2012.01.24
PROJECT NO	112180002
FILENAME	M-001.DWG
SHEET No.	
DRAWING NO	M-001

PREPARED FOR: DISTRICT OF SUMMERLAND

PREPARED BY: Stantec Consulting Ltd. Suite 400 1620 Dickson Avenue Kelowna, BC V1Y 7T2 Phone: (250) 860-9225 Fax: (250) 860-3367 www.stantec.com

DRN	CLS	2012.07.27	3	ISSUED FOR 100% REVIEW	CLS	JTK	2013.02.26
DES	MY	2012.01.24	1	ISSUED FOR 90% REVIEW	CLS	JTK	2013.01.30
CHK	MY		2	ISSUED FOR 60% REVIEW	CLS	MY	2012.12.20
APP	MY		NO	REVISIONS	DRN	CHK	DATE

U:\active\112180002_summerland_wwtp\civil\drawing\sheet\Grit Removal Process Drawings\M-001.dwg
2/26/2013 1:32 PM

ORIGINAL SHEET – 0ce D (22" x 34")

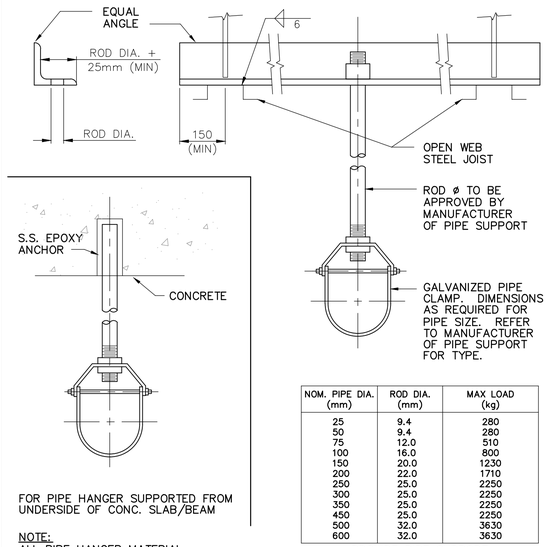

FOR PIPE HANGER SUPPORTED FROM UNDERSIDE OF CONC. SLAB/BEAM

NOTE:
ALL PIPE HANGER MATERIAL TO BE 316 SS

NOM. PIPE DIA. (mm)	ROD DIA. (mm)	MAX LOAD (kg)
25	9.4	280
50	9.4	280
75	12.0	510
100	16.0	800
150	20.0	1230
200	22.0	1710
250	25.0	2250
300	25.0	2250
350	25.0	2250
450	25.0	2250
500	32.0	3630
600	32.0	3630

PROVIDE PIPE SUPPORT WITH SAFETY FACTOR = 5 GRINNELL OR SIMILAR

STD 217 PIPE HANGER

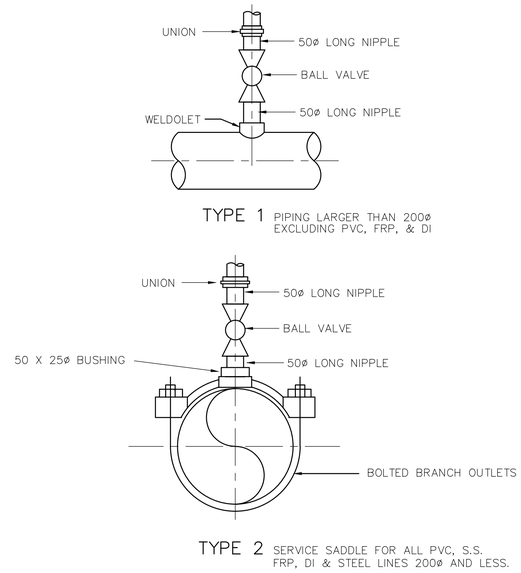

STD 503 TYPE 1 AND 2 TAPPINGS

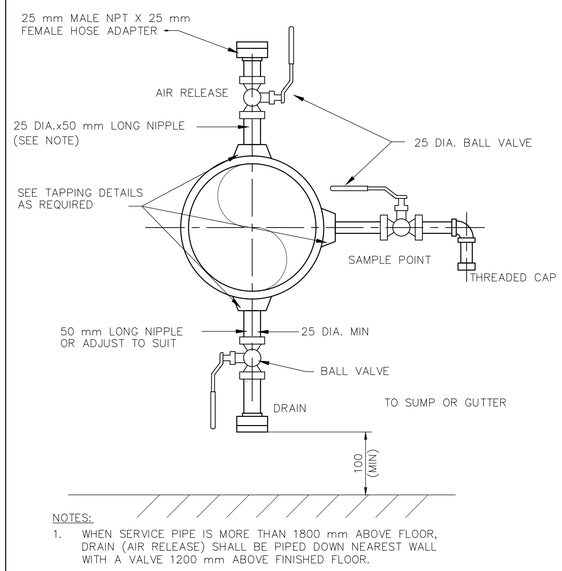

NOTES:
1. WHEN SERVICE PIPE IS MORE THAN 1800 mm ABOVE FLOOR, DRAIN (AIR RELEASE) SHALL BE PIPED DOWN NEAREST WALL WITH A VALVE 1200 mm ABOVE FINISHED FLOOR.

STD 504 25mm AIR RELEASE, SAMPLE AND DRAIN CONNECTION DETAILS

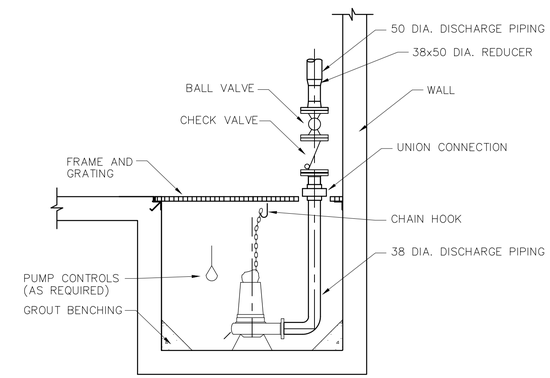

NOTES:
1. SUMP PUMP: GOULDS MODEL EP0411AC OR APPROVED EQUAL
2. REFER TO STRUCTURAL DRAWINGS FOR SUMP DETAILS

STD 613 SUMP PUMP SECTION

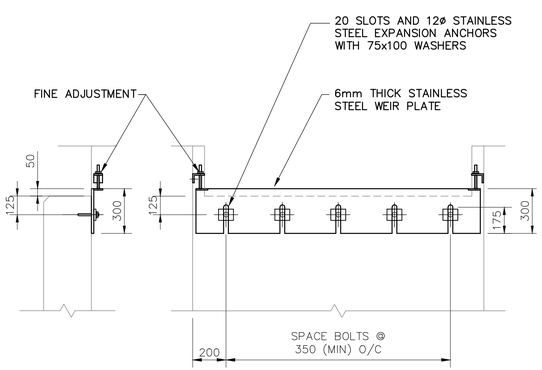

NOTE:
WEIR PLATE SHALL ENTIRE CHANNEL WIDTH

STD 620 WEIR PLATE DETAIL

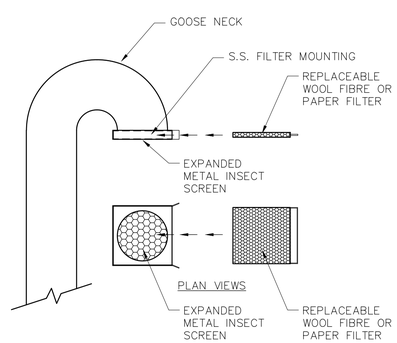

STD 715 REPLACEABLE GOOSE NECK FILTER

DATE	2012.01.24
PROJECT NO	112180002
FILENAME	M-002.DWG
SHEET No.	
DRAWING NO	M-002

DISTRICT OF SUMMERLAND
WASTEWATER TREATMENT FACILITY UPGRADE

GRIT REMOVAL PROCESS UPGRADE
STANDARD DETAILS
SHEET 2

PREPARED FOR
DISTRICT OF SUMMERLAND

PREPARED BY
Stantec Consulting Ltd.
Suite 400
1620 Dickson Avenue
Kelowna, BC V1Y 0P2
Phone: (250) 860-3225
Fax: (250) 860-3367
www.stantec.com

NO	REVISIONS	DRN	CHK	DATE
3	ISSUED FOR 100% REVIEW	CLS	JTK	2013.02.26
1	ISSUED FOR 90% REVIEW	CLS	JTK	2013.01.30
2	ISSUED FOR 60% REVIEW	CLS	MY	2012.12.20

DRN	CLS	2012.07.27
DES	MY	2012.01.24
CHK	MY	
APP	MY	

U:\active\112180002_summerland_wwtp\civil\drawing\sheet\Grit Removal Process Drawings\M-002.dwg
2/27/2013 9:40 AM

ORIGINAL SHEET – 0ce D (22" x 34")

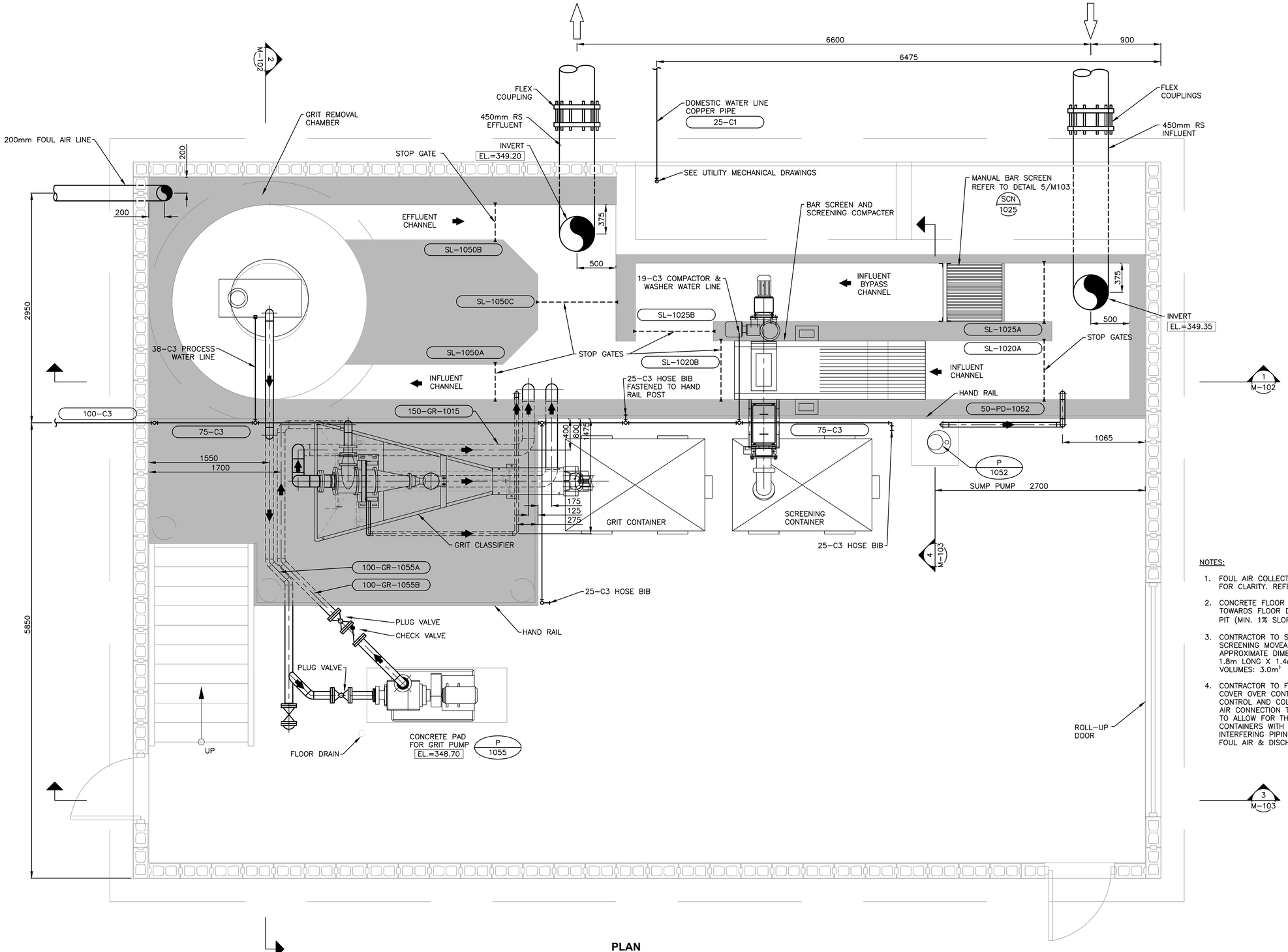

PLAN
SCALE 1:25

NOTES:

1. FOUL AIR COLLECTION SYSTEM NOT SHOWN FOR CLARITY. REFER TO MECHANICAL DWGS.
2. CONCRETE FLOOR SLAB TO BE SLOPED TOWARDS FLOOR DRAIN AND SUMP PUMP PIT (MIN. 1% SLOPE).
3. CONTRACTOR TO SUPPLY TWO (2) GRIT & SCREENING MOVEABLE CONTAINERS. APPROXIMATE DIMENSIONS: 1.2m WIDE X 1.8m LONG X 1.4m DEEP. APPROXIMATE VOLUMES: $3.0m^3$
4. CONTRACTOR TO FABRICATE SS HOOD COVER OVER CONTAINERS FOR ODOUR CONTROL AND COLLECTION OF WASTE. FOUL AIR CONNECTION TO EACH COVER. COVERS TO ALLOW FOR THE REMOVAL OF THE CONTAINERS WITH THE DISCONNECTING OF INTERFERING PIPING OR DISCONNECTING FOUL AIR & DISCHARGE PIPES.

NO	REVISIONS	DRN	CHK	DATE
3	ISSUED FOR 100% REVIEW	CLS	JTK	2013.02.26
1	ISSUED FOR 90% REVIEW	CLS	JTK	2013.01.30
2	ISSUED FOR 60% REVIEW	CLS	MY	2012.12.20

DRN	CLS
DES	MY
CHK	MY
APP	MY
2012.07.27	
2012.01.24	

PREPARED BY

Stantec Consulting Ltd.
Suite 400
1620 Dickson Avenue
Kelowna, BC V1Y 7X2
Phone: (250) 860-3225
Fax: (250) 860-3367
www.stantec.com

PREPARED FOR

DISTRICT OF SUMMERLAND

DATE 2012.01.24
PROJECT NO 112180002
FILENAME M-101.DWG
SHEET No.
DRAWING NO M-101

DISTRICT OF SUMMERLAND
WASTEWATER TREATMENT FACILITY UPGRADE

GRIT REMOVAL PROCESS UPGRADE
MAIN LEVEL PLAN

U:\active\112180002_summerland_wwtp\civil\drawing\sheet\Grit Removal Process Drawings\M-101.dwg
2/27/2013 10:25 AM

ORIGINAL SHEET - Oce D (22" x 34")

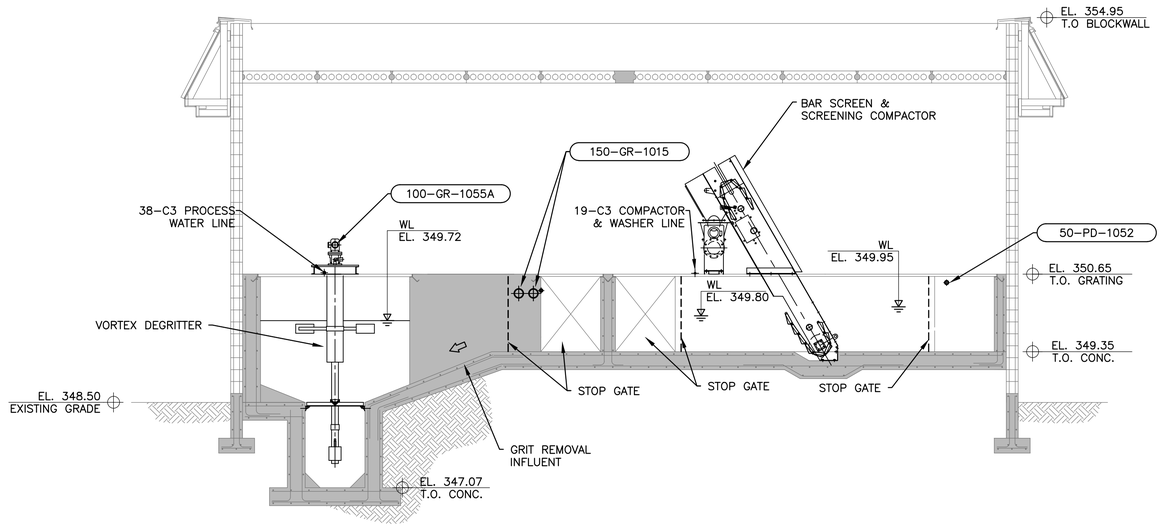

1 M-102 **SECTION**
SCALE 1:50

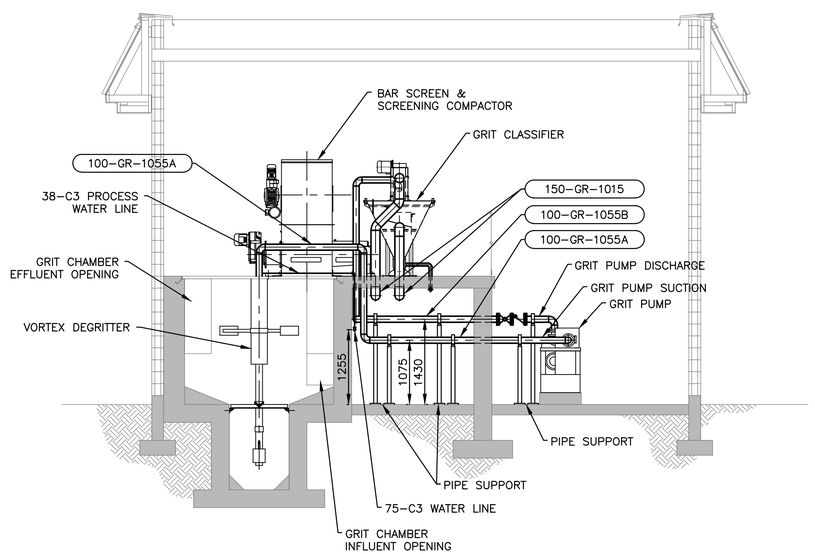

2 M-102 **SECTION**
SCALE 1:50

DATE	2012.01.24
PROJECT NO	112180002
FILENAME	M-102.DWG
SHEET No.	
DRAWING NO	M-102

DISTRICT OF SUMMERLAND
WASTEWATER TREATMENT FACILITY UPGRADE

GRIT REMOVAL PROCESS UPGRADE
SECTIONS AND DETAILS

PREPARED FOR

DISTRICT OF SUMMERLAND

PREPARED BY

Stantec Consulting Ltd.
Suite 400
1620 Dickson Avenue
Kelowna, BC V1Y 0P9
Phone: (250) 860-3225
Fax: (250) 860-3367
www.stantec.com

NO	REVISIONS	DRN	CHK	DATE
3	ISSUED FOR 100% REVIEW	CLS	JTK	2013.02.26
1	ISSUED FOR 90% REVIEW	CLS	JTK	2013.01.30
2	ISSUED FOR 60% REVIEW	CLS	MY	2012.12.20

DRN	CLS	2012.07.27
DES	MY	2012.01.24
CHK	MY	
APP	MY	

U:\active\112180002_summerland_wwtp\civil\drawing\sheet\Grit Removal Process Drawings\M-102.dwg
2/26/2013 1:36 PM

ORIGINAL SHEET - Oce D (22" x 34")

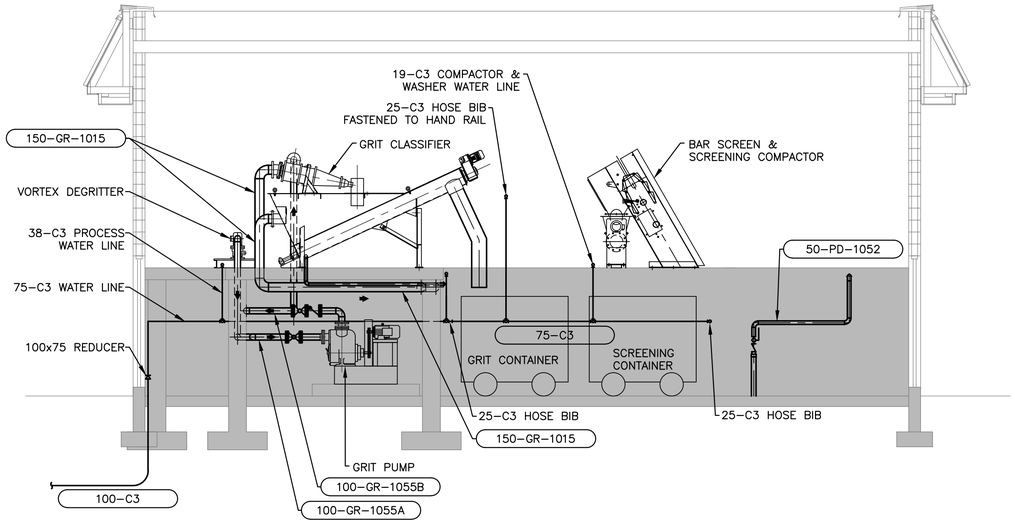

3 M-103 **SECTION**
SCALE 1:50

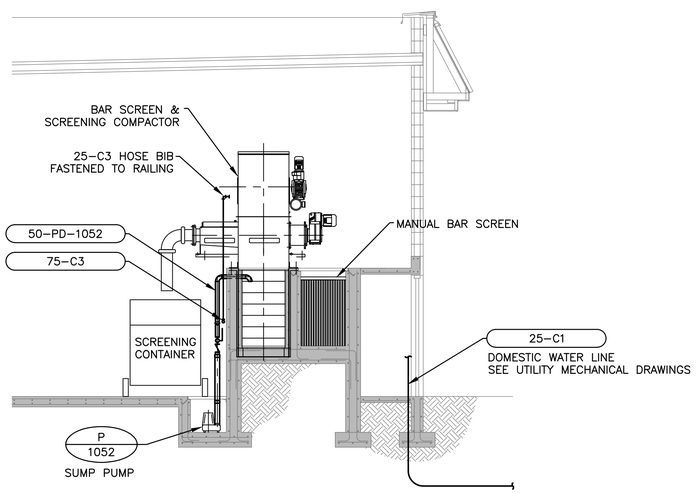

4 M-103 **SECTION**
SCALE 1:50

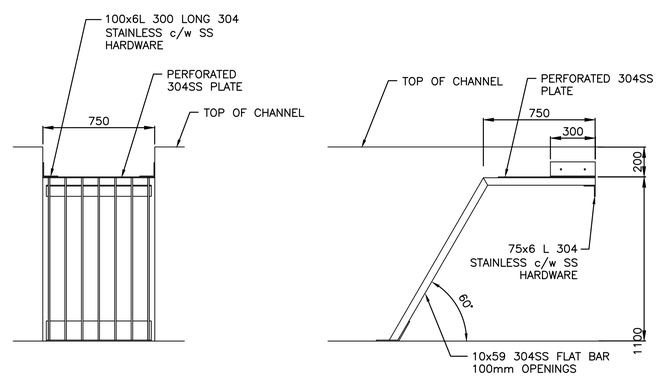

FRONT ELEVATION

SIDE ELEVATION

5 M-103 **MANUAL BAR SCREEN DETAIL**
SCALE 1:20

DATE	2012.01.24
PROJECT NO	112180002
FILENAME	M-103.DWG
SHEET No.	
DRAWING NO	M-103

DISTRICT OF SUMMERLAND
WASTEWATER TREATMENT FACILITY UPGRADE

GRIT REMOVAL PROCESS UPGRADE
SECTIONS AND DETAILS

PREPARED FOR

DISTRICT OF SUMMERLAND

PREPARED BY

Stantec Consulting Ltd.
Suite 400
1620 Dickson Avenue
Kelowna, BC V1Y 0P9
Phone: (250) 860-3225
Fax: (250) 860-3367
www.stantec.com

Stantec

NO	REVISIONS	DRN	CHK	DATE
3	ISSUED FOR 100% REVIEW	CLS	JTK	2013.02.26
1	ISSUED FOR 90% REVIEW	CLS	JTK	2013.01.30
2	ISSUED FOR 60% REVIEW	CLS	MY	2012.12.20

DRN	CLS	2012.07.27
DES	MY	2012.01.24
CHK	MY	
APP	MY	

U:\active\112180002_summerland_wwtp\civil\drawing\sheet\Grit Removal Process Drawings\M-103.dwg
2/26/2013 1:38 PM

ORIGINAL SHEET - Oce D (22" x 34")

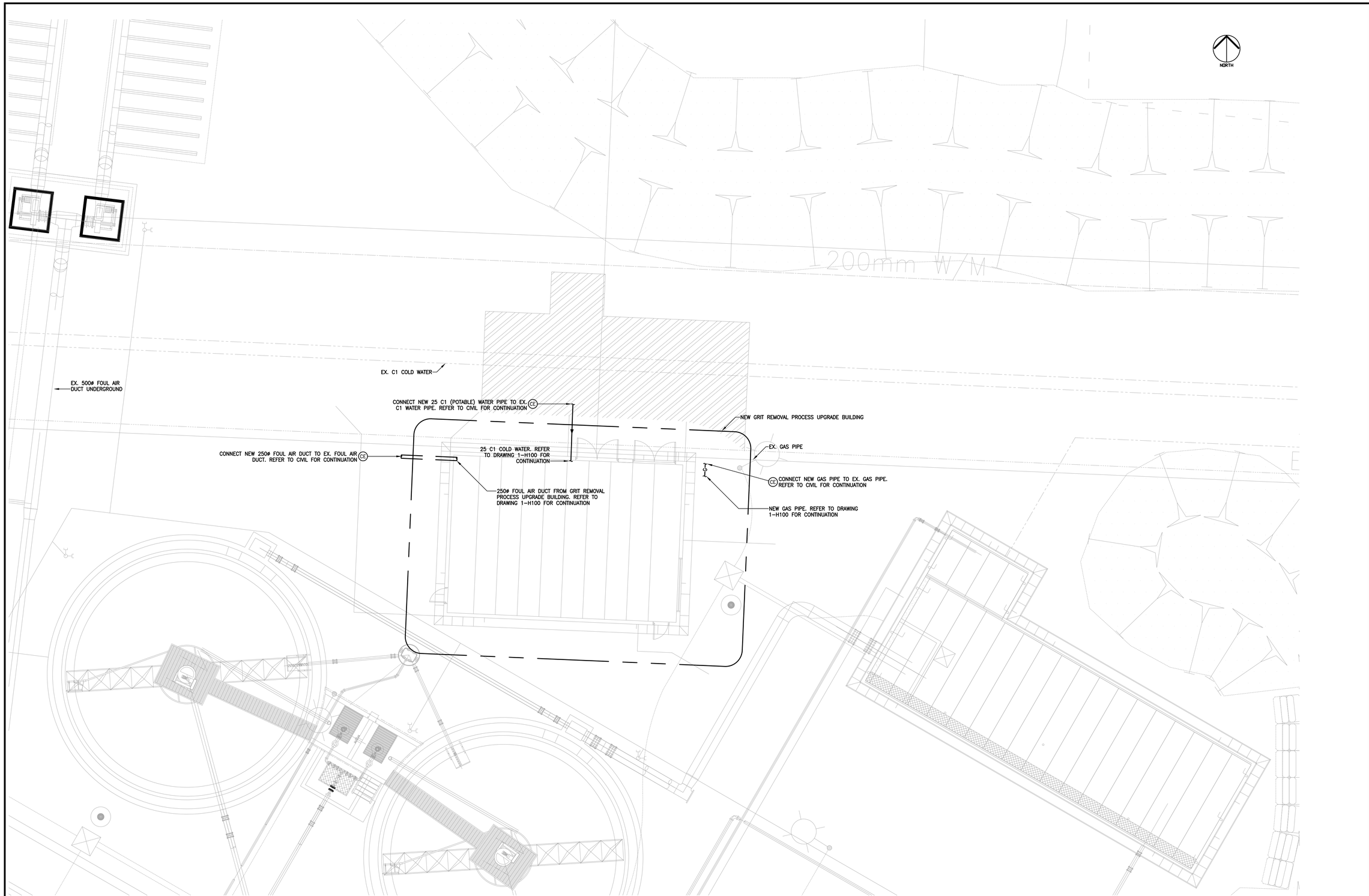

1 H001 SITE PLAN
SCALE: 1:100

PRELIMINARY
FOR DISCUSSION PURPOSES ONLY

DATE	2012.12.19
PROJECT NO	112180002
FILENAME	H-001.DWG
SHEET No.	
DRAWING NO	H-001

DISTRICT OF SUMMERLAND
WASTEWATER TREATMENT FACILITY UPGRADE

GRIT REMOVAL PROCESS UPGRADE
MECHANICAL SITE PLAN

PREPARED FOR

DISTRICT OF SUMMERLAND
WESTERN HOSPITALITY, VALUES

PREPARED BY

Stantec Consulting Ltd.
Suite 400
1620 Dickson Avenue
Kelowna, BC V1Y 0P7
Phone: (250) 860-3225
Fax: (250) 860-3367
www.stantec.com
Stantec

NO	REVISIONS	DRN	CHK	DATE
1	ISSUED FOR 100% REVIEW	BHB	DAB	2013.02.26
0	ISSUED FOR REVIEW	BHB	DAB	2012.12.20

DRN	BHB	2012.12.18
DES	DAB	2012.18.19
CHK		
APP		

GENERAL NOTES

1. ALL VERTICAL FOUL AIR DUCTS DOWN TO CONNECTION POINTS TO BE FLEXIBLE DUCT.

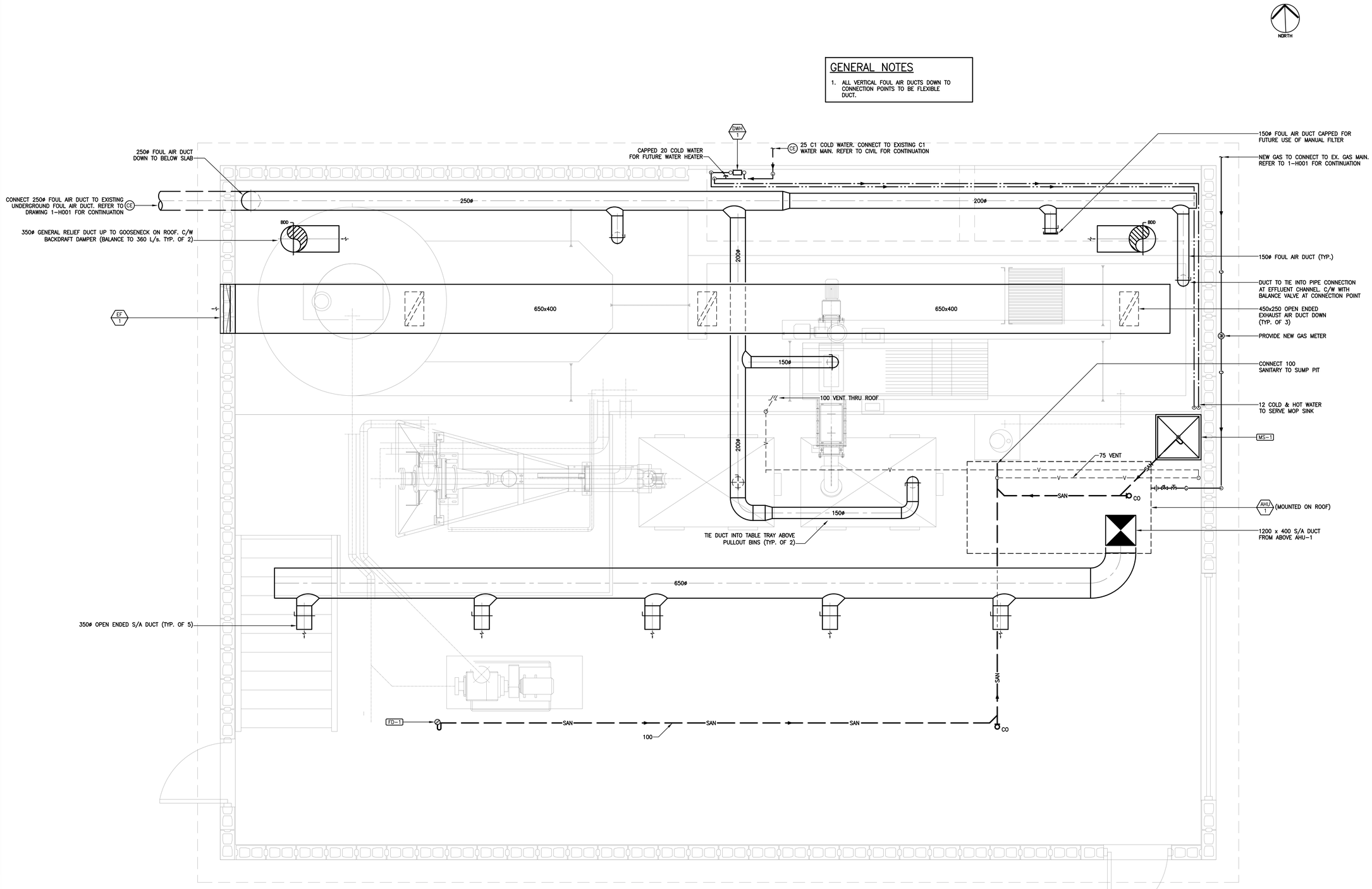

1 H100 **PLAN**
SCALE 1:25

PRELIMINARY
FOR DISCUSSION PURPOSES ONLY

DATE	2012.12.19
PROJECT NO	112180002
FILENAME	H-100.DWG
SHEET No.	
DRAWING NO	H-100

DISTRICT OF SUMMERLAND
WASTEWATER TREATMENT FACILITY UPGRADE

GRIT REMOVAL PROCESS UPGRADE
MECHANICAL MAIN LEVEL PLAN

PREPARED FOR
DISTRICT OF SUMMERLAND

PREPARED BY
Stantec Consulting Ltd.
Suite 400
1620 Dickson Avenue
Kelowna, BC V1Y 0P2
Phone: (250) 763-3225
Fax: (250) 860-3367
www.stantec.com
Stantec

NO	REVISIONS	DRN	CHK	DATE
0	ISSUED FOR REVIEW	BHB	DAB	2012.12.20
1	ISSUED FOR 100% REVIEW	BHB	DAB	2013.02.26

DRN	BHB	2012.12.18
DES	DAB	2012.12.19
CHK		
APP		

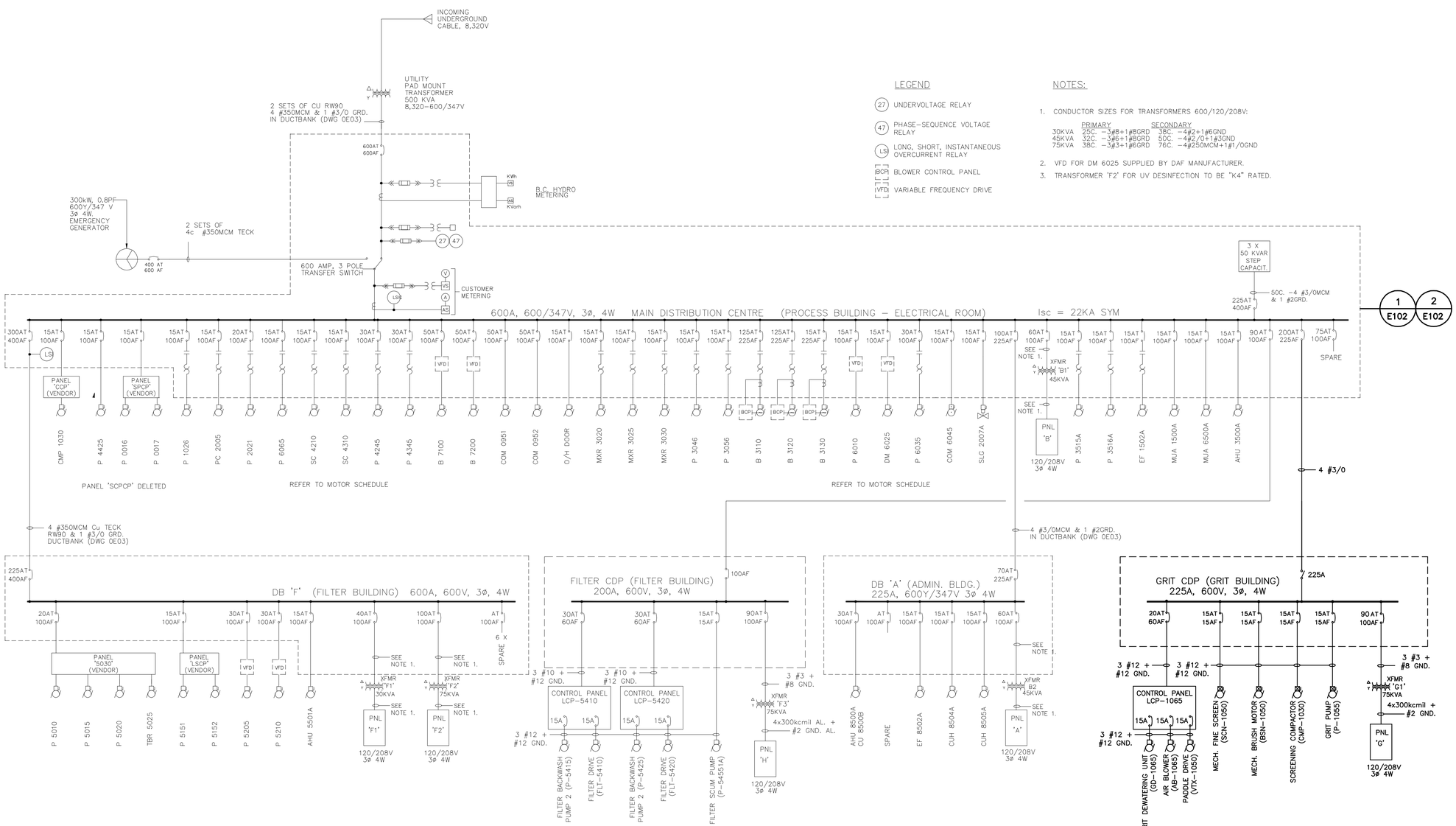

LEGEND

- (27) UNDERVOLTAGE RELAY
- (47) PHASE–SEQUENCE VOLTAGE RELAY
- (LS) LONG, SHORT, INSTANTANEOUS OVERCURRENT RELAY
- (BCP) BLOWER CONTROL PANEL
- (VFD) VARIABLE FREQUENCY DRIVE

NOTES:

1. CONDUCTOR SIZES FOR TRANSFORMERS 600/120/208V:

	PRIMARY	SECONDARY
30KVA	25C. –3#8+1#8GRD	38C. –4#2+1#6GND
45KVA	32C. –3#6+1#8GRD	50C. –4#2/0+1#3GND
75KVA	38C. –3#3+1#6GRD	76C. –4#250MCM+1#1/0GND

2. VFD FOR DM 6025 SUPPLIED BY DAF MANUFACTURER.
3. TRANSFORMER 'F2' FOR UV DESINFECTION TO BE "K4" RATED.

1 E100 SINGLE LINE DIAGRAM
SCALE NTS

DATE	2012.01.24
PROJECT NO	112180002
FILENAME	E–002.DWG
SHEET No.	
DRAWING NO	E-100

DISTRICT OF SUMMERLAND
WASTEWATER TREATMENT FACILITY UPGRADE

GRIT REMOVAL PROCESS UPGRADE
SINGLE LINE DIAGRAM

PREPARED FOR

DISTRICT OF SUMMERLAND

PREPARED BY

Stantec Consulting Ltd.
Suite 400
1708 Dolphin Avenue
Kelowna, BC V1Y 9V2
Phone: (250) 860-3225
Fax: (250) 860-3367
www.stantec.com

Stantec

NO	REVISIONS	DRN	CHK	DATE
2	ISSUED FOR 100% REVIEW	MP	EG	2013.02.26
1	ISSUED FOR 90% REVIEW	MAP	EG	2013.01.30

DRN	MAP	2013.01.30
DES	EG	2013.01.30
CHK	EG	
APP	EG	

U:\active\112180002_summerland_wwtp\electrical\drawing\Grit Room Sheets\E-100.dwg
2/27/2013 3:12 PM

ORIGINAL SHEET – ISO D

Process Load Schedule

Unit No.	Unit Description	Unit Location	Motor Data hp	Volt	Ph	FLA	Breaker Amps	Feeder	Feeder Type (mm)	Starter Location	Type (b)	Size	Control (c)	P.L. (e)	Control Type (d)	Supl'd by (a)	Instl'd by (a)	Wiring by (a)	Notes
	GENERAL																		
COM 0951	AIR COMPRESSOR 1	AREA 0	20	575	3	22	50A 3P	3 #10 +GRD	TECK	MDC				R					1
COM 0952	AIR COMPRESSOR 2	AREA 0	20	575	3	22	50A 3P	3 #10 +GRD	TECK	MDC				R					1
ADR 0955	INSTR. AIR COND. SYSTEM	AREA	N/A	120	1	N/A	15A 1P	2 #12 +GRD	TECK	PNL B									1
P 6065	SLUDGE TRANSFER PUMP	AREA 6	10	575	3	11	20A 3P	3 #12 +GRD	TECK	MDC	Mg	1	HOA	R					2,6
P 5205	RECYCLE WATER PUMP 1	AREA 5	10	575	3	11	30A 3P	3 #12 +GRD	TECK	DB F	VFD	x	HOA	R					2,6
P 5210	RECYCLE WATER PUMP 2	AREA 5	10	575	3	11	30A 3P	3 #12 +GRD	TECK	DB F	VFD	x	HOA	R					2,6
B 7100	BIOFILTER FAN	AREA 7	20	575	3	22	50A 3P	3 #10 +GRD	TECK	MDC	VFD	x	HOA	R					2,6
B 7200	BIOFILTER FAN	AREA 7	20	575	3	22	50A 3P	3 #10 +GRD	TECK	MDC	VFD	x	HOA	R					2,6
	HEADWORKS																		
BSCP	BAR SCREEN CONTROL PNL.	AREA 1		120	1		15A 1P	2 #12 +GRD	TECK	PNL B									1
SCN 1020	BAR SCREEN DRIVE	AREA 1	0.17	120	1	3.8	15A 1P	2 #12 +GRD	TECK	BSCP									3,4,6
CCP	COMPACTOR CONTR. PNL.	AREA 1	1.5	575	3	2.6	15A 3P	3 #12 +GRD	TECK	MDC				R					1
CMP 1030	COMPACTOR	AREA 1	1.5	575	3	2.6	15A 3P	3 #12 +GRD	TECK	CCP									3,5,6
SPCP	SUMP PUMP CONTR. PNL.	AREA 1	4.4	575	3	5.2	15A 3P	3 #12 +GRD	TECK	MDC				R					1
P 0016	SUMP PUMP	AREA 1	2.2	575	3	2.6	15A 3P	3 #12 +GRD	TECK	SPCP				R					3,6
P 0017	SUMP PUMP	AREA 1	2.2	575	3	2.6	15A 3P	3 #12 +GRD	TECK	SPCP				R					3,6
P 1035	EQUALIZATION PUMP 1	AREA 1	5	575	3	6.1	15A 3P	3 #12 +GRD	TECK	MDC				R					3,6
VBA1030A	BALL VALVE ACTUATOR	AREA 1	N/A	575	3	N/A	15A 3P	3 #12 +GRD	TECK	MDC				R					1
	PRIMARY CLARIFIER																		
CM 2005	MECHANISM	AREA 2	0.5	575	3	0.8	15A 3P	3 #12 +GRD	TECK	MDC	Mg	1	HOA	R					2,6
P 2021	PRIMARY SLUDGE PUMP 1	AREA 2	3	575	3	3.9	15A 3P	3 #12 +GRD	TECK	MDC	Mg	1	HOA	R					2,6
VBA2010A	BALL VALVE ACTUATOR	AREA 2	N/A	575	3	N/A	15A 3P	3 #12 +GRD	TECK	MDC				R					1
VBA2020A	BALL VALVE ACTUATOR	AREA 2	N/A	575	3	N/A	15A 3P	3 #12 +GRD	TECK	MDC				R					1
SLG2007A	SLUICE GATE ACTUATOR	AREA 2	N/A	575	3	N/A	15A 3P	3 #12 +GRD	TECK	MDC				R					1
	BIOREACTOR																		
B 3110	AIR BLOWER 1	AREA 3	60	575	3	55.4	125A 3P	3 #4 +GRD	TECK	MDC	Mg	4	HOA	R					2,6,7
B 3120	AIR BLOWER 2	AREA 3	60	575	3	55.4	125A 3P	3 #4 +GRD	TECK	MDC	Mg	4	HOA	R					2,6,7
B 3130	AIR BLOWER 3	AREA 3	60	575	3	55.4	125A 3P	3 #4 +GRD	TECK	MDC	Mg	4	HOA	R					2,6,7
MXR 3020	ANAEROBIC MIXER	AREA 3	2.2	575	3	3.2	15A 3P	3 #12 +GRD	TECK	MDC	Mg	1	HOA	R					2,6
MXR 3025	ANOXIC MIXER 1	AREA 3	2.2	575	3	3.2	15A 3P	3 #12 +GRD	TECK	MDC	Mg	1	HOA	R					2,6
MXR 3030	ANOXIC MIXER 2	AREA 3	2.2	575	3	3.2	15A 3P	3 #12 +GRD	TECK	MDC	Mg	1	HOA	R					2,6
AMCP	ALUM. MET. PUMP PANEL	AREA 3	0.66	120	1	14.4	20A 3P	2 #12 +GRD	TECK	PNL B									1
P 3215	ALUM. MET. PUMP 1	AREA 3	0.33	120	1	0.72	15A 3P	2 #12 +GRD	TECK	AMCP			HOA	R					2,6
P 3225	ALUM. MET. PUMP 2	AREA 3	0.33	120	1	0.72	15A 3P	2 #12 +GRD	TECK	AMCP			HOA	R					2,6
P 6010	WAS PUMP 1	AREA 6	5	575	3	4.8	15A 3P	3 #12 +GRD	TECK	MDC	VFD		HOA	R					2,6
P 3046	RECYCLE PUMP 1	AREA 3	4	575	3	5.1	15A 3P	3 #12 +GRD	TECK	MDC	Mg	1	HOA	R					2,6
P 3056	RECYCLE PUMP 2	AREA 3	4	575	3	5.1	15A 3P	3 #12 +GRD	TECK	MDC	Mg	1	HOA	R					2,6
	SECONDARY CLARIFIER																		
SC 4210	MECHANISM 1	AREA 4	0.5	575	3	0.8	15A 3P	3 #12 +GRD	TECK	MDC	Mg	1	HOA	R					2,6
SC 4310	MECHANISM 2	AREA 4	0.5	575	3	0.8	15A 3P	3 #12 +GRD	TECK	MDC	Mg	1	HOA	R					2,6
P 4245	RAS PUMP 1	AREA 4	7.5	575	3	9	20A 3P	3 #12 +GRD	TECK	MDC	Mg	1	OO	R					2,6
P 4345	RAS PUMP 2	AREA 4	7.5	575	3	9	20A 3P	3 #12 +GRD	TECK	MDC	Mg	1	OO	R					2,6
P 4425	SCUM PUMP 1	AREA 4	3.2	575	3	3.3	15A 3P	3 #12 +GRD	TECK	MDC	Ma	1	SS	R					3,6
	FILTER																		
PNL 5030	EFFLUENT FILTER	AREA 5	10	575	3		20A 3P	3 #10 +GRD	TECK	DB F				R					1,8
P 5010	BACKWASH PUMP	AREA 5	3	575	3	3.9	15A 3P	3 #12 +GRD	TECK	PNL 5030									3
P 5015	WASHWATER PUMP	AREA 5	3	575	3	3.9	15A 3P	3 #12 +GRD	TECK	PNL 5030									3
P 5020	SKIMMER PUMP	AREA 5	3	575	3	3.9	15A 3P	3 #12 +GRD	TECK	PNL 5030									3
TBR 5025	TRAVELLING BRIDGE	AREA 5	0.5	575	3	0.8	15A 3P	3 #12 +GRD	TECK	PNL 5030									3
LSCP	LIFT STATION CONTR. PNL.	AREA 5		575	3		15A 3P	3 #12 +GRD	TECK	DB F				R					1
P 5151	LIFT STATION PUMP 1	AREA 5	3.2	575	3	3.3	15A 3P	3 #12 +GRD	TECK	LSCP									3,6
P 5152	LIFT STATION PUMP 2	AREA 5	3.2	575	3	3.3	15A 3P	3 #12 +GRD	TECK	LSCP									3,6
P 5301	HYPOCHL. METERING PUMP	AREA 5		120	1	1.5	15A 1P	2 #12 +GRD	TECK	PNL F1									9
P 5302	HYPOCHL. METERING PUMP	AREA 5		120	1	1.5	15A 1P	2 #12 +GRD	TECK	PNL F1									9
	UV																		
UV 5051	UV BANK 1	AREA 5		208	3	17	30A 3P	4 #10 +GRD	TECK	PNL F2									2
UV 5052	UV BANK 2	AREA 5		208	3	17	30A 3P	4 #10 +GRD	TECK	PNL F2									2
UV 5053	UV BANK 3	AREA 5		208	3	17	30A 3P	4 #10 +GRD	TECK	PNL F2									2
	DAF																		
DM 6025	DAF THICKENER	AREA 3	1	575	3	1.4	15A 3P	3 #12 +GRD	TECK	MDC	VFD	x	HOA	R					1,2
P 6035	RECYCLE PUMP	AREA 3	10	575	3	11	20A 3P	3 #12 +GRD	TECK	MDC	Mg	1	HOA	R					2
COM 6045	COMPRESSOR	AREA 6	2	575	3	2.3	15A 3P	3 #12 +GRD	TECK	MDC	Mg	1	HOA	R					1,2,3
	OTHER LOADS																		
DB F	DISTRIBUTION PANEL	AREA 5					300A3P	4 350MCM +GRD	TECK	MDC									1
DB A	DISTRIBUTION PANEL	AREA 8					100A3P	4 3/0MCM +GRD	TECK	MDC									1
XFMR B1	TRANSFORMER B1	AREA 3					60A 3P	3 #6 +GRD	TECK	MDC									1
	CAPACITOR BANKS	AREA 3					225A3P	4 3/0MCM +GRD	TECK	MDC									1
	SPARE						100A3P			MDC									1
	SPARE						225A3P			MDC									1
	GRIT																		
LCP-1065	GRIT CHAMBER CONTROL PNL			575	3		20A 3P	3 #12 +GRD	TECK	GRIT CDP									
GD-1065	GRIT DEWATERING UNIT		2	575	3	2.2	15A 3P	3 #12 +GRD	TECK	LCP-1065			R						
VTX-1050	PADDLE DRIVE		1.5	575	3	1.1	15A 3P	3 #12 +GRD	TECK	LCP-1065			R						
P-1055	GRIT PUMP		7.5	575	3	9.0	15A 3P	3 #12 +GRD	TECK	GRIT CDP	Cm		HOA	R					
SCN-1050	MECH. FINE SCREEN		0.5	575	3	0.9	15A 3P	3 #12 +GRD	TECK	GRIT CDP	Cm		HOA	R					
BSN-1050	MECH. BRUSH MOTOR		1	575	3	1.4	15A 3P	3 #12 +GRD	TECK	GRIT CDP	Cm		HOA	R					
CMP-1030	SCREENING COMPACTOR		2	575	3	2.2	15A 3P	3 #12 +GRD	TECK	GRIT CDP	Cm		HOA	R					
DB G	DISTRIBUTION PANEL G			208	3	4.4	15A 3P	3 #4 +GRD	TECK	GRIT CDP									
P-1050	GRIT SUMP PUMP		0.4	120	1	12	15A 1P	2 #12 +GRD	TECK	DB G			HOA						
MUA-1	MAU 3.73kW			208	3	10.4	15A 3P	3 #12 +GRD	TECK	DB G									
EF-1	EXHAUST AIR			120	1	5	15A 1P	2 #12 +GRD	TECK	DB G			HOA						
	LIGHTING			120	1	9.6	15A 1P	2 #12 +GRD	TECK	DB G			OS						

Mechanical Motor Schedule

Unit No.	Unit Description	Unit Location	Motor Data KW	Volt	Ph	FLA	Breaker Amps	Feeder	Conduit Size (mm)	Starter Location	Type (b)	Size	Control (c)	P.L. (e)	Control Type (d)	Supl'd by (a)	Instl'd by (a)	Wiring by (a)	Notes
	PROCESS BUILDING																		
MUA 1500A	MAKE-UP AIR UNIT	AREA 3	–	575	3	4.2	15A 3P	3 #12 +GRD	19	AT UNIT	Mg	1	HOA	R	T	M	M	M	1,3,5,6
MUA 6500A	MAKE-UP AIR UNIT	AREA 3	–	575	3	3.2	15A 3P	3 #12 +GRD	19	AT UNIT	Mg	1	HOA	R	T	M	M	M	1,3,5,8
EF 6501A	EXHAUST FAN	AREA 3	0.37	120	1	9.8	20A 1P	2 #12 +GRD	12	AT UNIT	Ma	–	OA	R	–	E	E	E	–
EF 1502A	EXHAUST FAN	AREA 3	0.75	575	3	1.4	15A 3P	3 #12 +GRD	19	MDC	Mg	1	SS	R	O	E	E	E	8,10
SF 6502A	SUPPLY FAN	AREA 3	1.1	208	3	5.2	15A 3P	3 #12 +GRD	19	PNL B	Mg	1	SS	R	O	E	E	E	8,10
CUH 3530A	CABINET UNIT HEATER	AREA 3	0.03	120	1	–	15A 1P	2 #12 +GRD	12	PNL B	Ma	–	SS	R	T	E	E	E	–
CUH 6515A	CABINET UNIT HEATER	AREA 3	0.03	120	1	–	15A 1P	2 #12 +GRD	12	PNL B	Ma	–	SS	R	T	E	E	E	–
CUH 3535A	CABINET UNIT HEATER	AREA 3	0.03	120	1	–	15A 1P	2 #12 +GRD	12	PNL B	Ma	–	SS	R	T	E	E	E	–
BLR 3509A	BOILER	AREA 3		120	1	1.5	15A 1P	2 #12 +GRD	12	AT UNIT	Ma	–	SS	R	T	M	E	E	8
BLR 3510A	BOILER	AREA 3		120	1	1.5	15A 1P	2 #12 +GRD	12	AT UNIT	Ma	–	SS	R	T	M	E	E	8
BLR 3511A	BOILER	AREA 3		120	1	1.5	15A 1P	2 #12 +GRD	12	AT UNIT	Ma	–	SS	R	T	M	E	E	8
BLR 3512A	BOILER	AREA 3		120	1	1.5	15A 1P	2 #12 +GRD	12	AT UNIT	Ma	–	SS	R	T	M	E	E	8
BLR 3513A	BOILER	AREA 3		120	1	1.5	15A 1P	2 #12 +GRD	12	AT UNIT	Ma	–	SS	R	T	M	E	E	8
DWH 1521A	DOM. WATER HEATER	AREA 3		120	1	–	15A 1P	2 #12 +GRD	12	PNL B	Ma	–	SS	R	T	M	E	E	8
P 3515A	GLYCOL PUMP	AREA 3	3.73	575	3	6.1	15A 3P	3 #12 +GRD	19	MDC	Mg	1	HOA	R	O	M	E	E	8
P 3516A	GLYCOL PUMP	AREA 3	3.73	575	3	6.1	15A 3P	3 #12 +GRD	19	MDC	Mg	1	HOA	R	O	M	E	E	8
P 3517A	GLYCOL FILL	AREA 3	0.25	115	1	–	15A 1P	2 #12 +GRD	12	AT UNIT	Mg	–	OA	R	T	M	E	E	8
AHU 3500A	AIR HANDLING UNIT	AREA 3	–	575	3	6.7	15A 3P	3 #12 +GRD	19	AT UNIT	Ma	1	HOA	R	T	M	M	M	1,3,8
UH 3525A	UNIT HEATER	AREA 3	0.062	120	1	–	15A 1P	2 #12 +GRD	12	AT UNIT	Ma		SS	R	T	M	E	E	–
UH 3510A	UNIT HEATER	AREA 3	0.037	120	1	–	15A 1P	2 #12 +GRD	12	AT UNIT	Ma	–	SS	R	T	M	E	E	–
UH 3515A	UNIT HEATER	AREA 3	0.062	120	1	–	15A 1P	2 #12 +GRD	12	AT UNIT	Ma	–	SS	R	T	M	E	E	–
UH 3520A	UNIT HEATER	AREA 3	0.037	120	1	–	15A 1P	2 #12 +GRD	12	AT UNIT	Ma	–	SS	R	T	M	E	E	–
UH 3505A	UNIT HEATER	AREA 3	0.062	120	1	–	15A 1P	2 #12 +GRD	12	AT UNIT	Ma		SS	R	T	M	E	E	
CU 3520A	EVAPORATOR UNIT	AREA 5		208	1	28	40A 2P	2 #8 +GRD	12	AT UNIT	Mg	1	OA	R	T	M	M	M	1,3,8
CU 3520B	CONDENSING UNIT	AREA 5		208	3	19	30A 3P	3 #10 +GRD	19	AT UNIT	Mg	1	OA	R	T	M	M	M	1,3,8
	ADMINISTR. BUILDING																		
AHU 8500A CU 8500B	AIR HANDLING UNIT & CONDENSING UNIT	AREA 8		575	3	19.7	30A 3P	3 #10 +GRD	19	AT UNIT	Mg	1	OA	R	T	M	M	M	1,3,8
DWH 8501A	DOM. WATER HEATER	AREA 8		115	1	–	15A 1P	2 #12 +GRD	12	Mech.Rm.	Ma	–	SS	R	T	M	E	E	8
EF 8502A	LAB. EXHAUST FAN	AREA 8	2.23	575	3	3.9	15A 3P	3 #12 +GRD	19	AT UNIT	Mg	1	SS	R	–	M	E	E	8
EF 8503A	SANIT. EXHAUST FAN	AREA 8	0.19	115	1	–	15A 1P	2 #12 +GRD	12	AT UNIT	Ma	–	SS	R	–	M	E	E	8
CUH 8504A	ELEC. CABINET HEATER	AREA 8	3	208	1	–	30A2P	2 #10 +GRD	19	AT UNIT	Mg	–	OA	R	T	M	E	E	1,3,8
CUH 8505A	ELEC. CABINET HEATER	AREA 8	4	208	1	–	30A3P	2 #10 +GRD	19	AT UNIT	Mg	–	OA	R	T	M	E	E	1,3,8
	FILTER BUILDING																		
CU 5000A	EVAPORATOR UNIT	AREA 5		208	1	28	40A 2P	2 #8 +GRD	19	AT UNIT	Mg	1	OA	R	T	M	M	M	1,3,8
CU 5000B	CONDENSING UNIT	AREA 5		208	3	19	30A 3P	3 #10 +GRD	19	AT UNIT	Mg	1	OA	R	T	M	M	M	1,3,8
AHU 5501A	AIR HANDLING UNIT	AREA 5	–	575	3	4.3	15A 3P	3 #12 +GRD	19	AT UNIT	Ma		OA	R	T,H	M	M	M	1,3,8
SF 5502	SUPPLY FAN	AREA 5	0.186	115	1	–	15A 1P	2 #12 +GRD	12	AT UNIT	Ma	–	SS	R	T	M	E	E	8
UH 5503A	UNIT HEATER	AREA 5	0.025	115	1	–	15A 1P	2 #12 +GRD	12	AT UNIT	Ma	–	SS	R	T	M	E	E	8

(a)Supplied By:
- E = Electrical
- M = Mechanical

(b)Starter Type:
- Ma = Manual c/w pilot light
- Mg = Magnetic
- Cm = Combination

(c)Control Type:
- SS = Stop/Start
- OA = Off/Auto
- HOA = Hand /Off/Auto
- OO = On/Off

(d)Control Device:
- P = Pressure Switch
- F = Float Switch
- C = Time Clock
- T = Thermostat
- H = Humidifier
- D = Differential Level
- L = Level Electrode
- Q = Torque Switch

(e)Pilot Lights:
- R = Red (run)
- G = Green (off)

Notes for Process Load Schedule:
1. Provide Breaker Only.
2. Provide Disconnect Switch.
3. Starter in Division 15 Package Unit.
4. Interlocked with CMP 1030.
5. Interlocked with SCN 1020.
6. Local HOA Control.
7. Provide Space for 100HP Starter.
8. Festoon Cable by Vendor
9. Provide Receptacle 120V.

Notes for Mechanical Motor Schedule:
1. Provide Breaker Only.
2. Emergency Power.
3. Starter in Div.15 Package Unit.
4. Variable Speed Controllers by Div.15.
5. Two Speed Starter.
6. Reduced Voltage Starter.
7. Explosion Proof.
8. Provide Disconnect Switch

NO	REVISIONS	DRN	CHK	DATE
2	ISSUED FOR 100% REVIEW	MP	EG	2013.02.26
1	ISSUED FOR 90% REVIEW	MAP	EG	2013.01.30

DRN	MAP	2013.01.30
DES	EG	2013.01.30
CHK	EG	
APP	EG	

PREPARED BY

Stantec Consulting Ltd.
Suite 400
1331 Clyde Avenue
Kelowna, BC V1Y 9Y2
Phone: (250) 860-3225
Fax: (250) 860-3367
www.stantec.com
Stantec

PREPARED FOR

DISTRICT OF SUMMERLAND
WASTEWATER TREATMENT FACILITY UPGRADE

GRIT REMOVAL PROCESS UPGRADE
MDC / MCC MOTOR SCHEDULE

DATE	2012.01.24
PROJECT NO	112180002
FILENAME	E-002.DWG
SHEET No.	
DRAWING NO	E-101

U:\active\112180002_summerland_wwtp\electrical\drawing\Grit Room Sheets\E-101 .dwg
2/27/2013 3:13 PM

ORIGINAL SHEET – ISO D

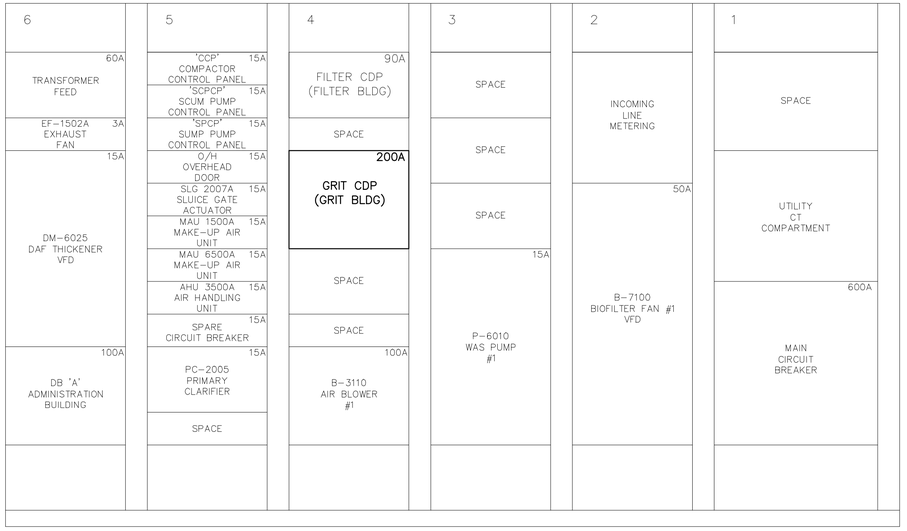

1 E102 EXISTING MCC WEST ELEVATION (REFER TO DWG. E100)
SCALE NTS

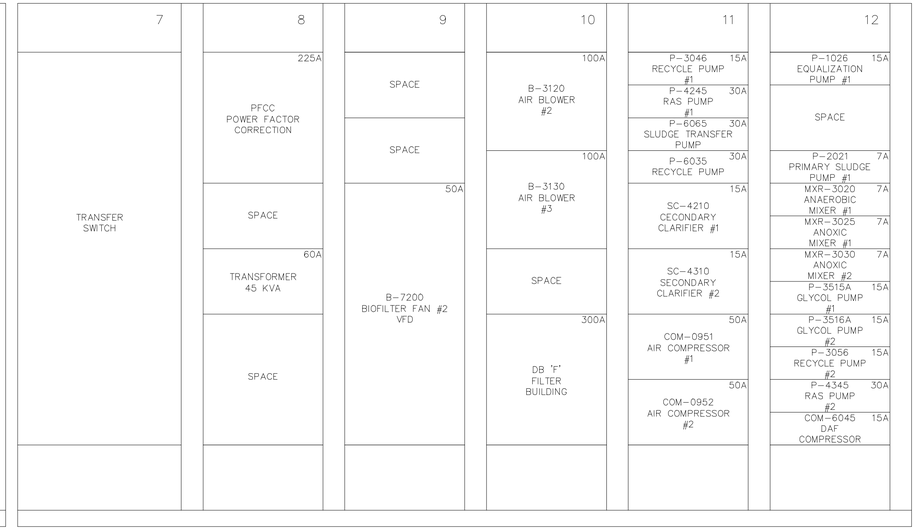

2 E102 EXISTING MCC EAST ELEVATION (REFER TO DWG. E100)
SCALE NTS

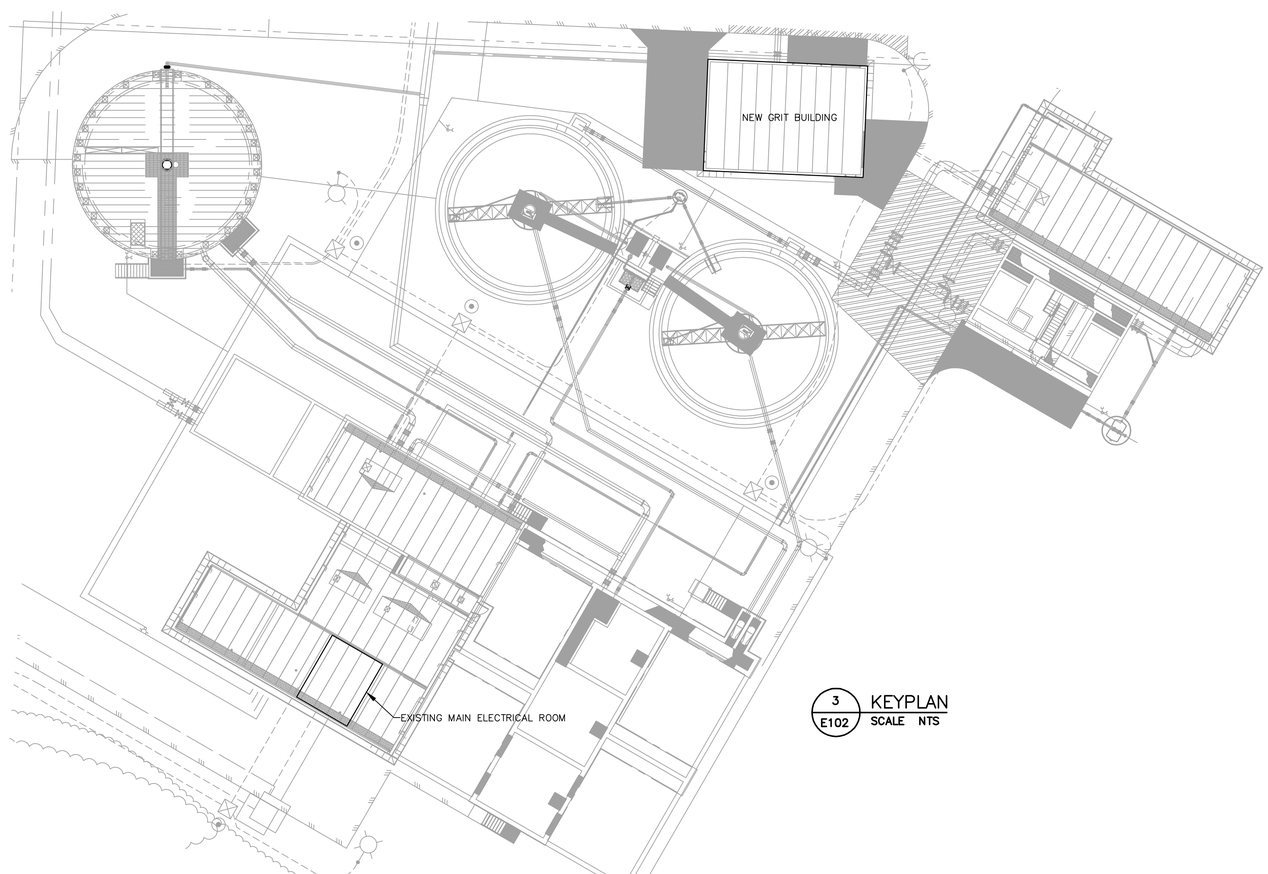

3 E102 KEYPLAN
SCALE NTS

DATE	2012.01.24
PROJECT NO	112180002
FILENAME	E-002.DWG
SHEET No.	
DRAWING NO	E-102

DISTRICT OF SUMMERLAND
WASTEWATER TREATMENT FACILITY UPGRADE

GRIT REMOVAL PROCESS UPGRADE
MCC ELEVATION

PREPARED FOR

DISTRICT OF SUMMERLAND
WATER IS LIFE. CELEBRATE. SUMMERLAND

PREPARED BY

Stantec Consulting Ltd.
Suite 400
1331 Clement Avenue
Kelowna, BC V1Y 8Y2
Phone: (250) 860-3225
Fax: (250) 860-3367
www.stantec.com
Stantec

NO	REVISIONS	DRN	CHK	DATE
2	ISSUED FOR 100% REVIEW	MP	EG	2013.02.26
1	ISSUED FOR 90% REVIEW	MAP	EG	2013.01.30

DRN	MAP	2013.01.30
DES	EG	2013.01.30
CHK	EG	
APP	EG	

U:\active\112180002_summerland_wwtp\electrical\drawing\Grit Room Sheets\E-102.dwg
2/27/2013 3:14 PM

ORIGINAL SHEET - ISO D

GENERAL SYMBOLS

XXX / XXXX	EQUIPMENT REFERENCE
#	REVISION NUMBER

LIGHTING PLAN SYMBOLS

	CEILING MOUNTED LED FIXTURE
	EXTERIOR WALL PACK
	WALL MOUNTED EXIT SIGN
3 3 3	LINE VOLTAGE TWO GANG 3-WAY SWITCHES

POWER PLAN SYMBOLS

WP GF	DUPLEX 5-15R RECEPTACLE C/W GFCI AND WEATHERPROOF PROTECTION
	ELECTRICAL DISTRIBUTION PANEL
WP	DIRECT CONNECTION TO MOTOR C/W WEATHERPROOF DISCONNECT SWITCH
	MOTOR STARTER
	DIRECT CONNECTION TO EQUIPMENT
LEL	LOWER EXPLOSIVE LIMIT SENSOR, MOUNT AT 15" AFF.
H_2S	HYDROGEN SULFIDE SENSOR, MOUNT AT 15" AFF.

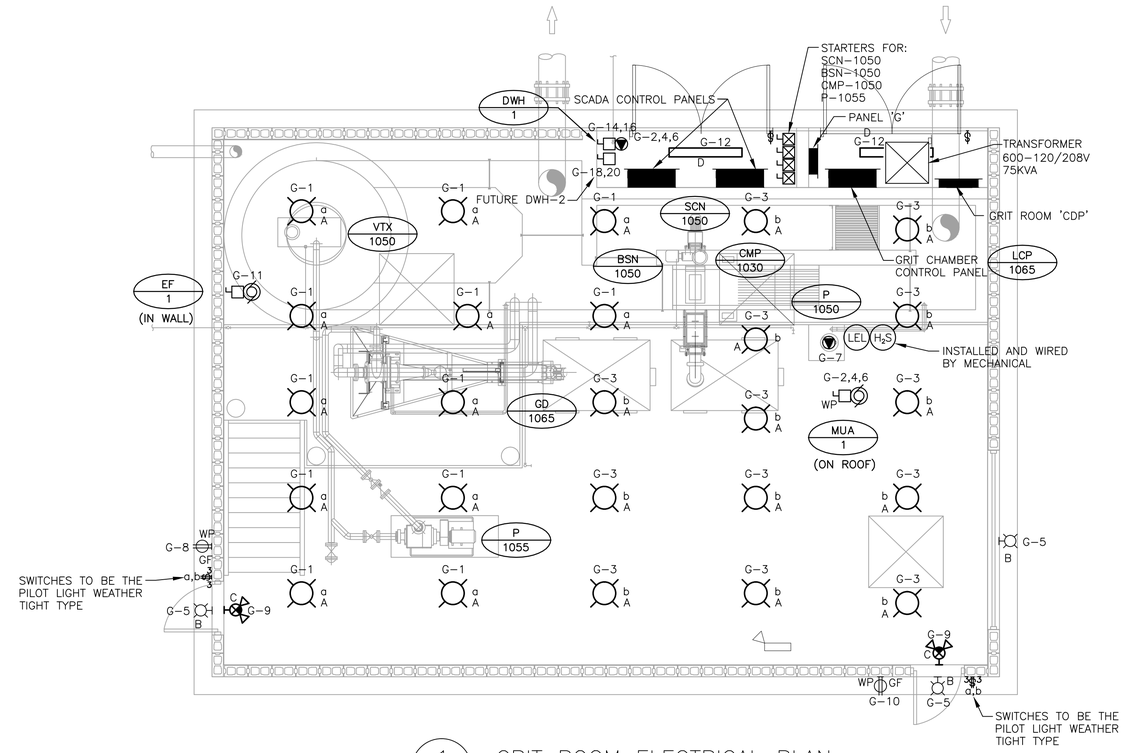

1 / E103 GRIT ROOM ELECTRICAL PLAN
1:50

NAME OF JOB: Grit Removal Process Upgrade	JOB NUMBER: 112180002 PANEL 'G'
PANEL TYPE: Surface mount	PANEL RATING: 400A Amps - 10 kAIR
PANEL LOCATION: Existing Filter Room Electrical Room	VOLTAGE: 120/208V, 3-PHASE, 4 WIRE

LOAD	KWATTS	DETAILS	AMP		A B C		AMP	DETAILS	KWATTS	LOAD
ltg	1.20	Grit Room Lighitng	15	1		2				
ltg	1.30	Grit Room Lighitng	15	3		4	15	MUA-1	3.73	mtr
ltg	0.03	Exterior Wall Packs	15	5		6				
pwr	0.40	Sump Pump Receptacle	15	7		8	15	Grit Room Recetpacles	0.40	pwr
ltg	0.10	Exit Lighting	15	9		10	15	Grit Room Recetpacles	0.40	pwr
mtr	0.60	EF-1	15	11		12	15	Electrical Room Lighting	0.12	ltg
pwr	0.20	MUA-1 Receptacle	15	13		14				
				15		16	30	DWH-1	7.50	pwr
				17		18				
				19		20				
				21		22	30	Future DWH-2	7.50	pwr
				23		24				
				25		26				
				27		28				
				29		30				
				31		32				
				33		34				
				35		36				
				37		38				
				39		40				
				41		42				

GENERAL NOTES:
1. THE ENTIRE GRIT ROOM SHALL BE CONSIDERED CLASS 1, ZONE 2 HAZARDOUS LOCATION. ALL ELECTRICAL EQUIPMENT SHALL BE IN ACCORDANCE WITH THE CANADIAN ELECTRICAL CODE.
2. ALL OPENINGS IN THE ELECTRICAL ROOM WALL BETWEEN GRIT ROOM AND ELECTRICAL ROOM SHALL BE PROPERLY SEALED TO PREVENT GAS MIGRATION INTO THE ELECTRICAL ROOM.

MECHANICAL EQUIPMENT SCHEDULE

TAG	DESCRIPTION	LOAD	VOLTAGE	CIRCUIT	BREAKER	WIRE SIZE	NOTES
MUA-1	MAKE UP AIR UNIT	3.73 kW	208V, 3ø	G-2,4,6	3P-15A	3#12	2,3,4
EF-1	EXHAUST FAN	0.6 kW	120V, 1ø	G-11	1P-15A	2#12	1
DWH-1	DOMESTIC WATER HEATER	7.5 kW	208V, 3ø	G-14,16,18	3P-30A	3#10	2

NOTES:
1. INTERLOCK w/ MUA-1 AND GAS DETECTION SYSTEM (BY ELECTRICAL CONTRACTOR)
2. PROVIDE DISCONNECT (WEATHERPROOF WHERE REQUIRED.)
3. PROVIDE WEATHER TIGHT GFCI PROTECTED RECEPTACLE ON MUA-1 ON DEDICATED CIRCUIT G-13.
4. CONTROLS (DDC) BY MECHANICAL.

LUMINAIRE SCHEDULE

TYPE	VOLTAGE	WATTAGE	LAMPS	NUMBER OF LAMPS	MOUNTING	MANUFACTURER	CATALOGUE NO.	REMARKS
A	120	98W	LED	–	CEILING MOUNTED	COOPER	CHAMP LED SERIES – VMV7L	CEILING SURFACE MOUNT
B	120	22W	LED	–	WALL MOUNTED	COOPER	LDWP-GL-ZA-ED-PE	C/W BUILT IN PHOTOCELL
C	120	10W	LED	–	WALL MOUNTED	EMERGI-LITE	EH SERIES C/W BATTERY BACKUP AND REMOTE HEADS	MIN. 2 HOUR BATTERY BACKUP
D	120	28W	T8	2	CEILING MOUNTED	CFI	EE248 C/W COLD WEATHER BALLAST AND 4' WIRE GUARD	CEILING SURFACE MOUNT

DATE	2012.01.24
PROJECT NO	112180002
FILENAME	E-002.DWG
SHEET No.	
DRAWING NO	E-103

DISTRICT OF SUMMERLAND
WASTEWATER TREATMENT FACILITY UPGRADE

GRIT REMOVAL PROCESS UPGRADE
GRIT ROOM ELECTRICAL PLAN

PREPARED FOR
DISTRICT OF SUMMERLAND

PREPARED BY
Stantec Consulting Ltd.
Suite 400
1331 Clifton Avenue
Kelowna, BC V1Y 9Y2
Phone: (250) 860-3225
Fax: (250) 860-3367
www.stantec.com
Stantec

NO	REVISIONS	DRN	CHK	DATE
2	ISSUED FOR 100% REVIEW	MAP	EG	2013.02.26
1	ISSUED FOR 90% REVIEW	MAP	EG	2013.01.30

DRN	MAP	2013.01.30
DES	EG	2013.01.30
CHK	EG	
APP	EG	

U:\active\112180002_summerland_wwtp\electrical\drawing\Grit Room Sheets\E-103.dwg
2/27/2013 3:16 PM

ORIGINAL SHEET – ISO D

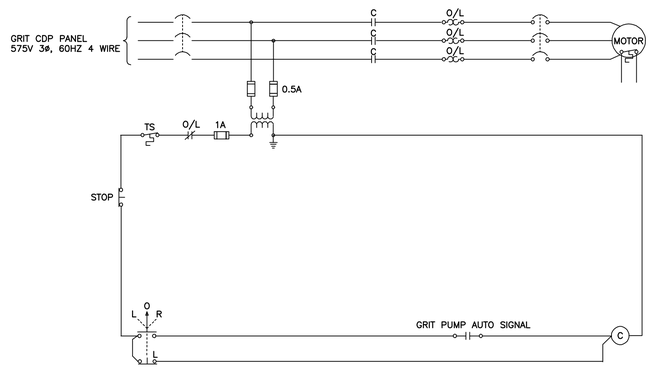

GRIT PUMP P–1055

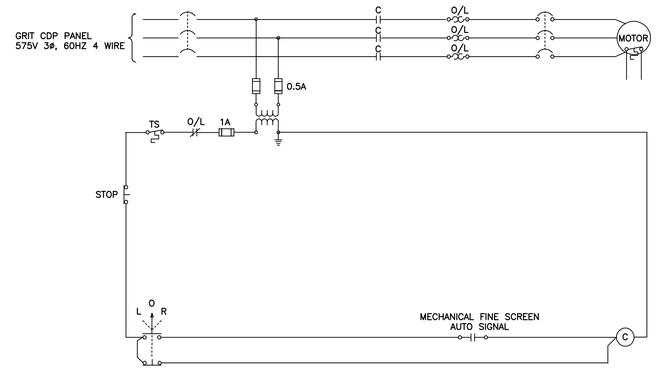

MECHANICAL FINE SCREEN SCN–1050

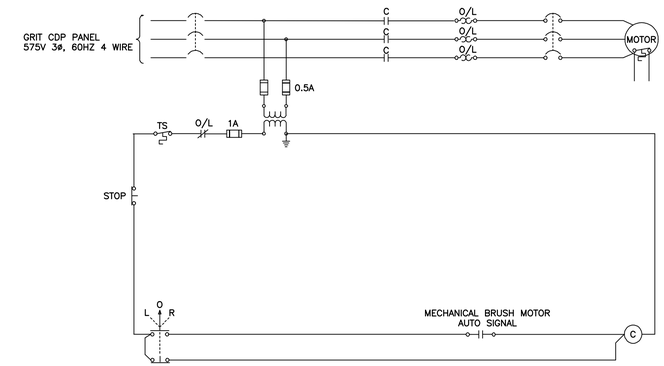

MECHANICAL BRUSH MOTOR BSN–1050

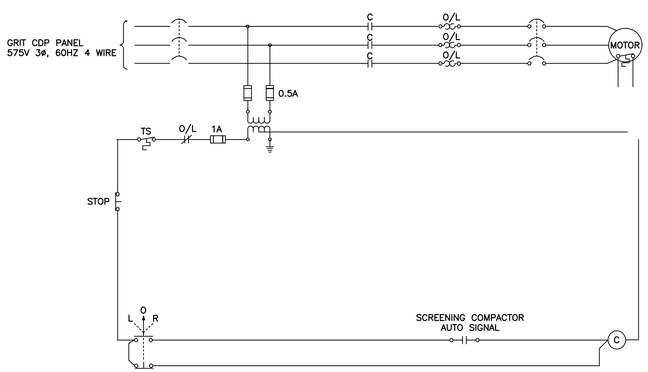

SCREENING COMPACTOR CMP–1030

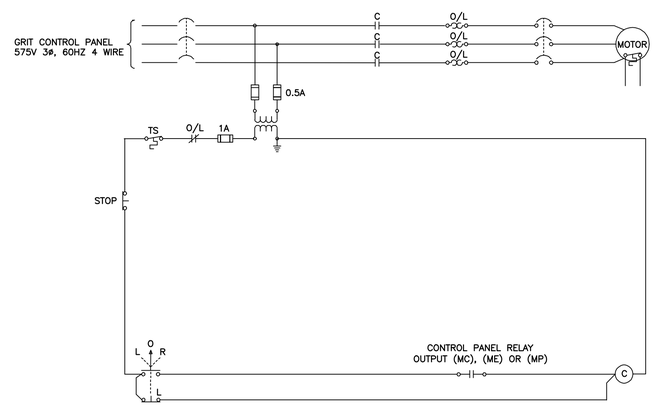

TYPICAL FOR GRIT DEWATERING
SCREW CONVEYOR (MC), AIR BLOWER
(ME) AND PADDLE DRIVE (MP)

DATE	2012.01.24
PROJECT NO	112180002
FILENAME	E–002.DWG
SHEET No.	
DRAWING NO	E-104

DISTRICT OF SUMMERLAND
WASTEWATER TREATMENT FACILITY UPGRADE

GRIT REMOVAL PROCESS UPGRADE
CONTROL SCHEMATICS

PREPARED FOR

DISTRICT OF SUMMERLAND
WESTERN HOSPITALITY, EASTERN HEART

PREPARED BY

Stantec Consulting Ltd.
Suite 400
1331 Clifton Avenue
Kelowna, BC V1Y 9Y2
Phone: (250) 860-3225
Fax: (250) 860-3367
www.stantec.com
Stantec

NO	REVISIONS	DRN	CHK	DATE
2	ISSUED FOR 100% REVIEW	MAP	EG	2013.02.26
1	ISSUED FOR 90% REVIEW	MAP	EG	2013.01.30

DRN	MAP	2013.01.30
DES	EG	2013.01.30
CHK	EG	
APP	EG	

U:\active\112180002_summerland_wwtp\electrical\drawing\Grit Room Sheets\E–104.dwg
2/27/2013 3:17 PM

ORIGINAL SHEET – ISO D

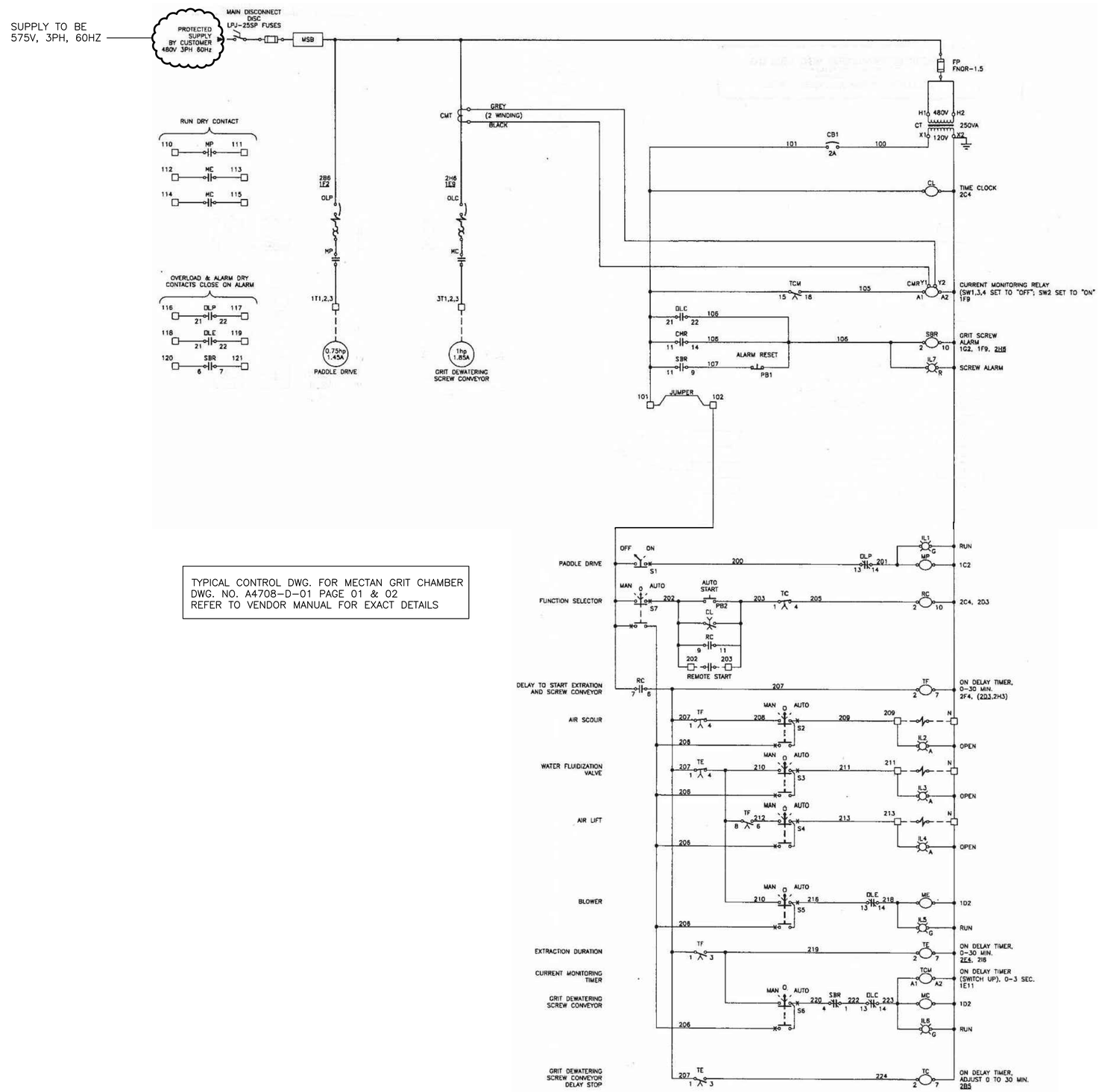

TYPICAL CONTROL DWG. FOR MECTAN GRIT CHAMBER
DWG. NO. A4708-D-01 PAGE 01 & 02
REFER TO VENDOR MANUAL FOR EXACT DETAILS

DATE	2012.01.24
PROJECT NO	112180002
FILENAME	E-002.DWG
SHEET No.	
DRAWING NO	E-105

DISTRICT OF SUMMERLAND
WASTEWATER TREATMENT FACILITY UPGRADE

GRIT REMOVAL PROCESS UPGRADE
GRIT CHAMBER CONTROL PANEL LCP-1065

PREPARED FOR

DISTRICT OF SUMMERLAND

PREPARED BY

Stantec Consulting Ltd.
Suite 400
1708 Dolphin Avenue
Kelowna, BC V1Y 9V2
Phone: (250) 860-3225
Fax: (250) 860-3367
www.stantec.com
Stantec

NO	REVISIONS	DRN	CHK	DATE
2	ISSUED FOR 100% REVIEW	MAP	EG	2013.02.26
1	ISSUED FOR 90% REVIEW	MAP	EG	2013.01.30

DRN	MAP	2013.01.30
DES	EG	2013.01.30
CHK	EG	
APP	EG	

U:\active\112180002_summerland_wwtp\electrical\drawing\Grit Room Sheets\E-105.dwg
2/27/2013 3:17 PM

ORIGINAL SHEET - ISO D

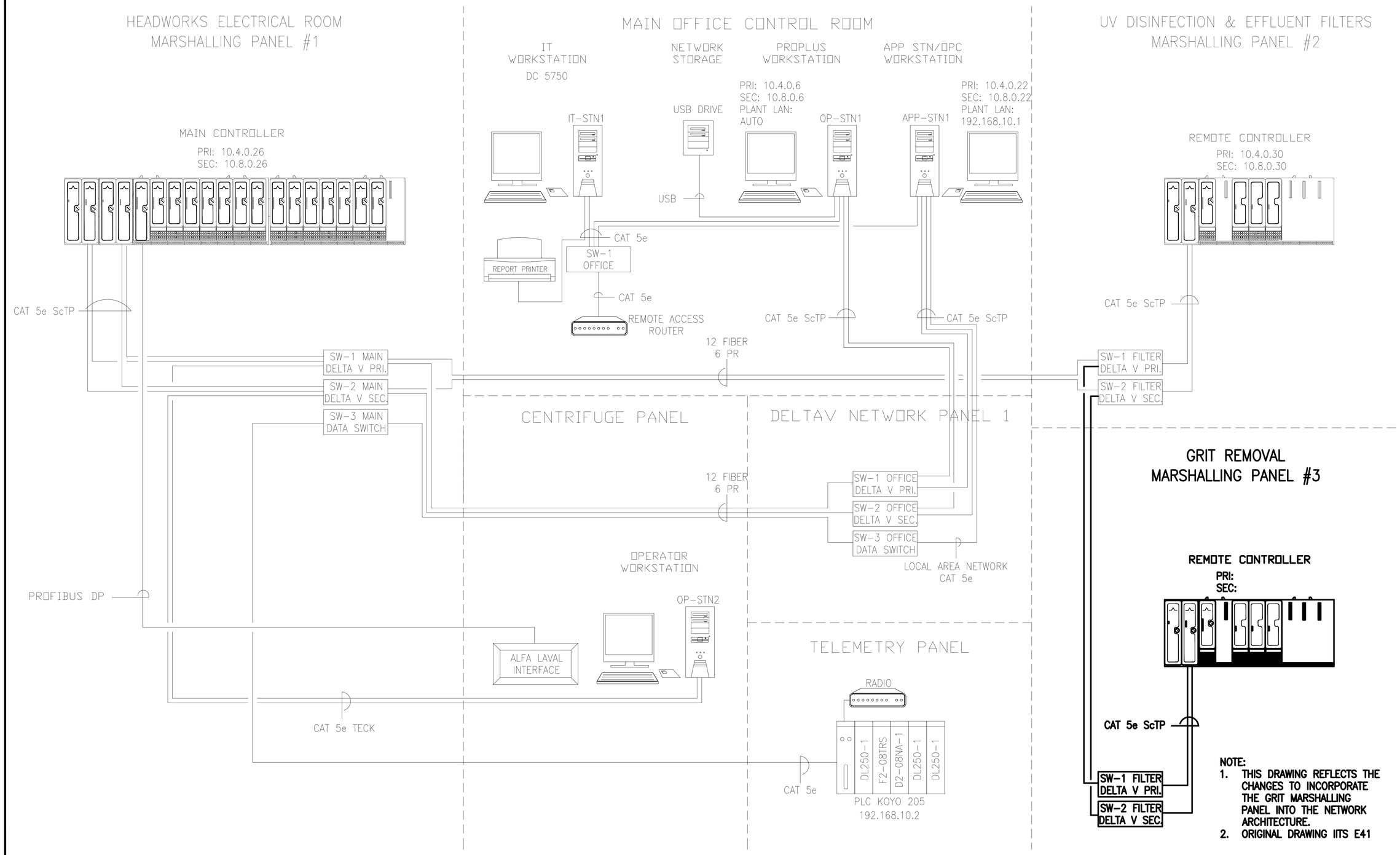

NOTE:
1. THIS DRAWING REFLECTS THE CHANGES TO INCORPORATE THE GRIT MARSHALLING PANEL INTO THE NETWORK ARCHITECTURE.
2. ORIGINAL DRAWING IITS E41

DATE	2012.01.24
PROJECT NO	112180002
FILENAME	E-002.DWG
SHEET No.	
DRAWING NO	I-100

DISTRICT OF SUMMERLAND
WASTEWATER TREATMENT FACILITY UPGRADE

GRIT REMOVAL PROECSS UPGRADE
DELTA-V ARCHITECTURE

PREPARED FOR

DISTRICT OF SUMMERLAND

PREPARED BY

Stantec Consulting Ltd.
Suite 400
1331 Clyde Avenue
Kelowna, BC V1Y 9Y2
Phone: (250) 860-3225
Fax: (250) 860-3367
www.stantec.com
Stantec

NO	REVISIONS	DRN	CHK	DATE
2	ISSUED FOR 100% REVIEW	MAP	EG	2013.02.26
1	ISSUED FOR 90% REVIEW	MAP	EG	2013.01.30

DRN	MAP	2013.01.30
DES	EG	2013.01.30
CHK	EG	
APP	EG	

U:\active\112180002_summerland_wwtp\electrical\drawing\Grit Room Sheets\I-100.dwg
2/27/2013 3:18 PM

ORIGINAL SHEET – ISO D

Bill of Materials

DID	DESCRIPTION	MANUFACTURER	PART NUMBER	QTY
1187	COMPUTER WORK STATION	DELL COMPUTER	CWS	1 ea
1214	LINKSYS ROUTER	LINKSYS	LINKSYS ELINK	1 ea
1270	WEBCTRL LIMITED TO 500 TOTAL POINTS	AUTOMATED LOGIC	WC500	1 ea

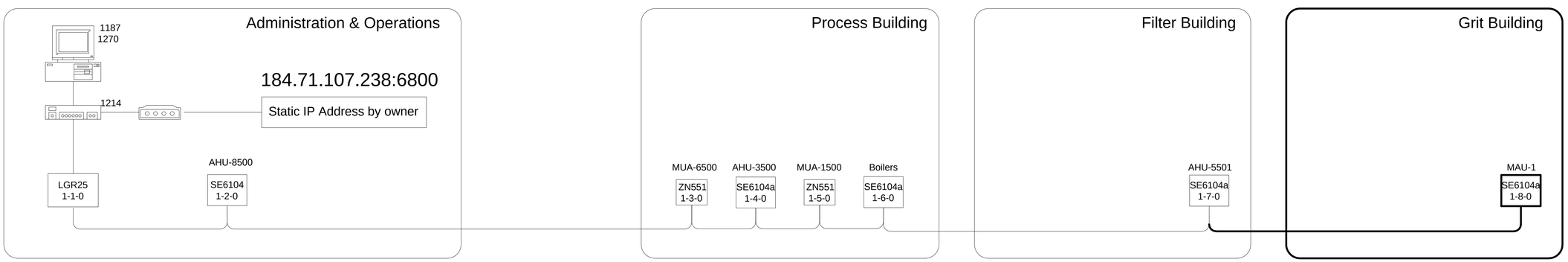

NOTE:
1. THIS DRAWING REFLECTS THE CHANGES TO INCORPORATE THE GRIT MARSHALLING PANEL INTO THE NETWORK ARCHITECTURE.
2. ORIGINAL DRAWING CARE SYSTEMS SERVICES LTD. 4 of 19

DATE 2012.01.24
PROJECT NO 112180002
FILENAME E-002.DWG
SHEET No.
DRAWING NO I-101

DISTRICT OF SUMMERLAND
WASTEWATER TREATMENT FACILITY UPGRADE

GRIT REMOVAL PROCESS UPGRADE
DELTA-V ARCHITECTURE

PREPARED FOR
DISTRICT OF SUMMERLAND

PREPARED BY

Stantec Consulting Ltd.
Suite 400
1326 Ellis Street
Kelowna, BC V1Y 9Y2
Phone: (250) 860-3225
Fax: (250) 860-3367
www.stantec.com
Stantec

NO	REVISIONS	DRN	CHK	DATE
2	ISSUED FOR 100% REVIEW	MAP	EG	2013.02.26
1	ISSUED FOR 90% REVIEW	MAP	EG	2013.01.30

DRN	MAP	2013.01.30
DES	EG	2013.01.30
CHK	EG	
APP	EG	

U:\active\112180002_summerland_wwtp\electrical\drawing\Grit Room Sheets\I-101.dwg
2/27/2013 3:19 PM

ORIGINAL SHEET - ISO D